City of Pittsburgh
Department of City Planning

Zoning and Development Review
ZBA Requests Supplement

A. PROJECT INFORMATION

1. ZONING DEVELOPMENT REVIEW CASE INFORMATION

Application is: ☒ Development Project ☐ Protest Appeal

BDA Case Number: BDA-2024-06312

Project Description: USE OF 3,580 SQ FT FOR RESTAURANT (GENERAL)

Case Review Date: November 2024

2. SITE INFORMATION

Development Address: 5821 CENTRE AVE

Parcel (s): 84-E-262

Zoning Designation: UNC

Neighborhood: East Liberty

B. ZBA REQUESTS

Type of Request: Special Exception Code Section: §911.02

Description: Restaurant (General) requested; use permitted only by Special Exception in the UNC district.

OYOSHI

5803 CENTRE AVE, SPACE 105
PITTSBURGH, PA 15206

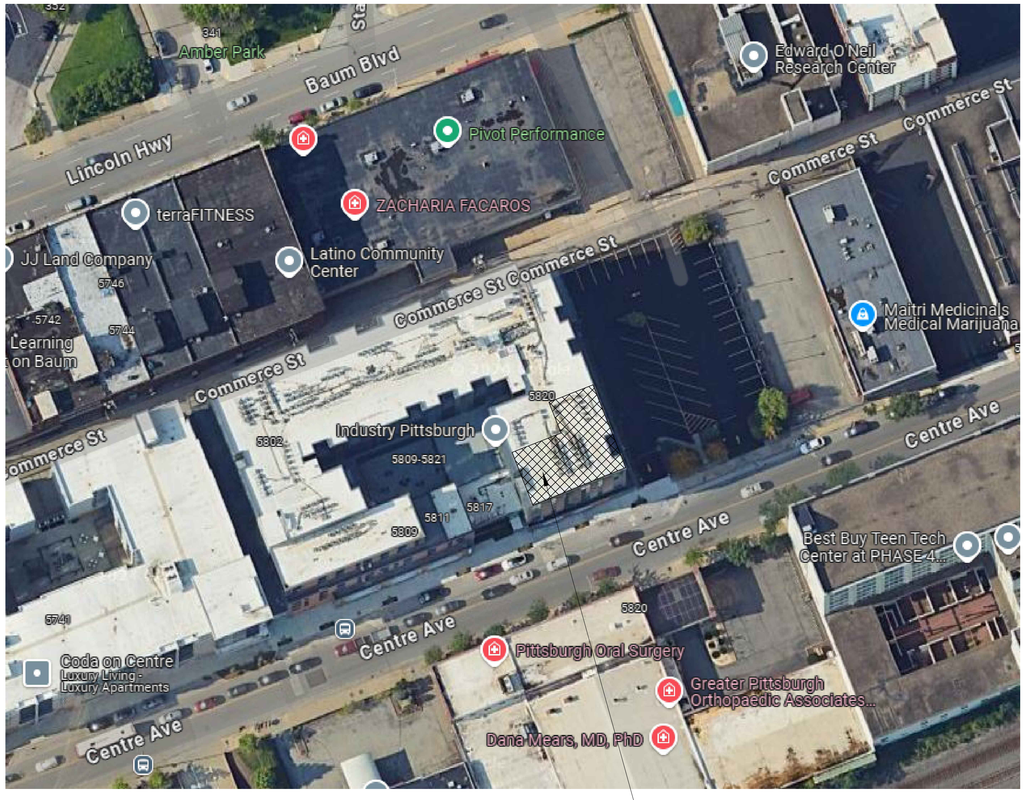

SITE

N W E S

LOCATION PLAN SCALE: N.T.S.

CODE CLASSIFICATION

- PA UNIFORM CONSTRUCTION CODE
- 2018 INTERNATIONAL BUILDING CODE CHAPTER 11 & APPENDIX E
- 2018 INTERNATIONAL BUILDING CODE (IBC)
- 2018 INTERNATIONAL EXISTING BUILDING CODE (IEBC)
- 2018 INTERNATIONAL PLUMBING CODE (IPC)
- 2018 INTERNATIONAL MECHANICAL CODE (IMC)
- 2018 INTERNATIONAL ENERGY CONSERVATION CODE (IECC)
- 2018 INTERNATIONAL FUEL GAS CODE (IFGC)
- 2017 NATIONAL ELECTRICAL CODE (NFPA 70)
- 2017 ICC/ANSI A117.1

PROJECT DATA

1. TOTAL SQUARE FOOTAGE: 3,580 ± SQ. FT.
2. CONSTRUCTION TYPE: I–A
3. STORY: 6
4. FIRE SPRINKLER SYSTEMS: YES
   (ANY ALTERATION TO EXISTING SPRINKLER SYSTEM, SPRINKLER CONTRACTOR SHALL SUBMIT SHOP DRAWING FOR APPROVAL AND PERMITS.)
5. USE/OCCUPANCY CLASSIFICATION (302): A–2 ASSEMBLY
6. BUILDING OCCUPANCY PER (IBC TABLE 1004.5) REQUIREMENTS
   BUILDING OCCUPANCY CALCULATIONS FOR LIFE SAFETY

OCCUPANT LOAD

	SPACE DESCRIPTION	SEATING TYPE	AREA		AREA PER OCCUPANT	QTY	CALCULATED OCCUPANT LOAD
CUSTOMERS	DINING AREA–1	BOOTH	48	INCH	24	6	12
		Unconcentrated (Tables & Chairs)	510	SF	15	N/A	34
	DINING AREA–2	BOOTH	168	INCH	24	2	14
		Unconcentrated (Tables & Chairs)	90	SF	15	N/A	6
	SUSHI BAR	COUNTER	285	INCH	24	1	12
	BEVERAGE BAR	COUNTER	336	INCH	24	1	14
	WAITING AREA		30	SF	5	N/A	6
	CUSTOMERS TOTAL						98
EMPLOYEES	KITCHEN AREA		620	SF	200	N/A	3
	STORAGE AREA		280	SF	300	N/A	1
	OFFICE		75	SF	100	N/A	1
	WAITER STATION		96	SF	200	N/A	1
	BEVERAGE BAR		143	SF	200	N/A	1
	SUSHI BAR		226	SF	200	N/A	2
	CASHIER AREA		67	SF	200	N/A	1
	TOTAL						108

7. NUMBER OF EXITS (PER IBC, SECTION 1006.3.3)
   REQUIRED: 2
   PROVIDED: 2

8. PLUMBING REQUIREMENTS (PER TABLE 860–102A, COUNTY OF ALLEGHENY)
   TOTAL OCCUPANCY LOAD FOR THIS CALCULATION SHALL BE
   108/2 = 54 (54 MEN) (54 WOMEN)

	WATERCLOSETS		LAVATORIES	
	MALE	FEMALE	MALE	FEMALE
REQUIRED	2	2	1	1
PROVIDED	1 (WC) 1 (URINAL)	2	1	1

DEFERRED SUBMITTAL

- HOOD FIRE SUPPRESSION:
  HOOD FIRE SUPPRESSION CONTRACTOR SHALL SUBMIT FIRE SUPPRESSION SHOP DRAWING FOR APPROVAL AND PERMIT.

- SPRINKLER SYSTEM SUPPRESSION:
  ANY ALTERATION TO EXISTING SPRINKLER SYSTEM, SPRINKLER CONTRACTOR SHALL SUBMIT SHOP DRAWINGS AND REQUIRED DOCUMENTS FOR APPROVAL AND PERMIT SEPARATELY.

- FIRE ALARM SYSTEM:
  FIRE ALARM CONTRACTOR SHALL SUBMIT FIRE ALARM SYSTEM SHOP DRAWING FOR APPROVAL AND PERMIT.

PROJECT TEAM

ARCHITECT: FRANK D. MILETO AIA
14 BEAVER BROOK DRIVE, LONG VALLEY, NJ 07853
TEL: 908 876–9400
EMAIL: FMILETO@COMCAST.NET

CONSULTANT:
LAM & ASSOCIATES CONSULTING, INC.
11 EAST BROADWAY, 11C, NEW YORK, NY 10038
TEL: 212 732–3450
EMAIL: HSLAMCO@GMAIL.COM

GENERAL NOTE

1. THE CONTRACTOR SHALL FIELD VERIFY ALL CONDITIONS AND DIMENSIONS PRIOR TO ANY WORK AND SHALL BE RESPONSIBLE FOR ALL WORK AND MATERIALS INCLUDING THAT FURNISHED BY SUBCONTRACTORS.
2. DIMENSIONS TAKE PRECEDENCE OVER DRAWINGS, DO NOT SCALE DRAWINGS TO DETERMINE ANY LOCATION. THE OWNER SHALL BE NOTIFIED IF ANY DISCREPANCY OCCURS PRIOR TO CONTINUING WITH WORK.
3. ALL CONSTRUCTION SHALL COMPLY WITH THE APPLICABLE BUILDING CODES AND LOCAL RESTRICTIONS.
4. IT SHALL BE THE RESPONSIBILITY OF THE CONTRACTOR TO LOCATE ALL EXISTING MECHANICAL AND ELECTRICAL SERVICES AND DISTRIBUTION SYSTEMS WHETHER SHOWN OR NOT, AND TO PROTECT THEM FROM DAMAGE. THE CONTRACTOR SHALL BEAR ALL EXPENSE OR REPAIR OR REPLACEMENT OF UTILITIES OR OTHER PROPERTY DAMAGED BY OPERATIONS IN CONJUNCTION WITH THE PERFORMANCE OF THE WORK.
5. ALL WORK SHALL BE ACCOMPLISHED WITH QUALITY WORKMANSHIP OF THE HIGHEST INDUSTRY STANDARDS. ALL MATERIALS SHALL BE INSTALLED IN STRICT ACCORDANCE WITH THE MANUFACTURERS INSTRUCTIONS AND RECOMMENDATIONS. MATERIALS AND METHODS SHALL CONFORM TO THE APPROPRIATE NATIONAL TRADE BOOKS; I.E. TILE COUNCIL OF AMERICA, HANDBOOK FOR CERAMIC TILE INSTALLATION; ARCHITECTURAL WOODWORK INSTITUTE, "QUALITY STANDARDS." ETC.
6. THE CONTRACTOR SHALL BE RESPONSIBLE FOR JOB SAFETY, AND SHALL TAKE ALL NECESSARY PRECAUTIONS TO ENSURE SAFETY OF WORKERS AND OCCUPANTS AT ALL TIMES.
7. ALL ELECTRICAL, MECHANICAL, AND PLUMBING WORK SHALL CONFORM TO STATE AND LOCAL REQUIREMENTS.
8. REMODEL WORK SHALL NOT OBSTRUCT, OR CAUSE TO BE INOPERATIVE, EXISTING FIRE PROTECTION SYSTEMS. MODIFICATION TO FIRE PROTECTION SYSTEMS SHALL BE PERFORMED BY A FIRE PROTECTION CONTRACTOR, WHO SHALL OBTAIN A PERMIT FROM FIRE LOSS MANAGEMENT PRIOR TO WORK.
9. DECORATIVE MATERIALS, DRAPES, HANGINGS, ETC., SHALL BE NON FLAMMABLE OR FLAME–PROOF PER STATE FIRE MARSHALL REQUIREMENTS.
10. MINIMUM FLAME SPREAD CLASSIFICATION OF INTERIOR FINISH SHALL CONFORM TO THE BUILDING CODE AND LOCAL GOVERNING BUILDING CODES/ORDINANCES.
11. ALL WORK SHALL BE REQUIRED TO MEET THE LATEST INTERNATIONAL CODES AND PA L&T FIRE AND PANIC REGULATIONS, WHETHER SHOWN ON THESE PLANS OR NOT.

HEALTH DEPARTMENT NOTE

1. FURNISH 140° F WATER TO ALL FIXTURES RECEIVING HOT WATER, EXCEPT HAND WASHING LAV. MAY SUPPLIED WITH AT LEAST 110° F WATER THROUGH A MIXING VALVE OR COMBINATION FAUCET.
2. PROVIDE SOAP AND SANITARY TOWELS AT HAND WASHING LAV. IN FOOD PREPARATION AND UTENSIL WASHING AREAS, SOAP AND HAND DRYING DEVICE WILL BE USE IN THE TOILET ROOM.
3. COUNTER–MOUNTED EQUIPMENT ON 4 INCH LEGS, SEALED TO COUNTER, OR PORTABLE.
4. FLOOR–MOUNTED EQUIPMENT ON 6 INCH LEGS, ON CASTERS, OR SEALED TO THE FLOOR.
5. EQUIPMENT NOT CASTERS OR NOT PORTABLE SHALL BE SEALED TO THE WALL AND/OR JOINING EQUIPMENT, OR SPACED TO FACILITATE CLEANING.

INDEX SHEET

ARCHITECTURE	
T.1	PROJECT DATA, NOTES & LOCATION PLAN
A.1	LIFE SAFETY PLAN & EXISTING FLOOR PLAN
A.2	PROPOSED FLOOR PLAN
A.3	EQUIPMENT SCHEDULE, WALL DETAIL & DOOR SCHEDULE
A.4	SECTION DETAIL & BARRIER FREE DETAIL
ELECTRICAL	
E.1	ELECTRICAL PLAN, ELECTRICAL NOTES & REQUIREMENTS
E.2	LIGHTING PLAN & LIGHTING FIXTURE SCHEDULE
E.3	ELECTRICAL PANEL SCHEDULE & ELECTRICAL RISER DIAGRAM
MECHANICAL	
M.1	HVAC PLAN
M.2	VENTILATION PLAN, HOOD HANGING & NOTES
M.3	DETAILS & CALCULATION
M.3a~M.3h	ECON AIR DETAILS
PLUMBING	
P.1	PLUMBING FLOOR PLAN & NOTES
P.2	PLUMBING RISER DIAGRAM & DETAILS
P.3	WATER RISER DIAGRAM & DETAILS
P.4	GAS RISER DIAGRAM & DETAILS

FRANK D. MILETO A.I.A.
14 BEAVER BROOK DRIVE, LONG VALLEY, N.J. 07853
Tel:(908) 876-9400 Fax:(908) 876-9455
Email: fmileto@comcast.net

OYOSHI
5803 CENTRE AVE, SPACE 105
PITTSBURGH, PA 15206

REVISIONS

1 01–14–2025 CITY REVIEW

DATE: 10/11/2024
SCALE: AS DRAWING
DRAWN: DJ
JOB NO. C24–045

T-1

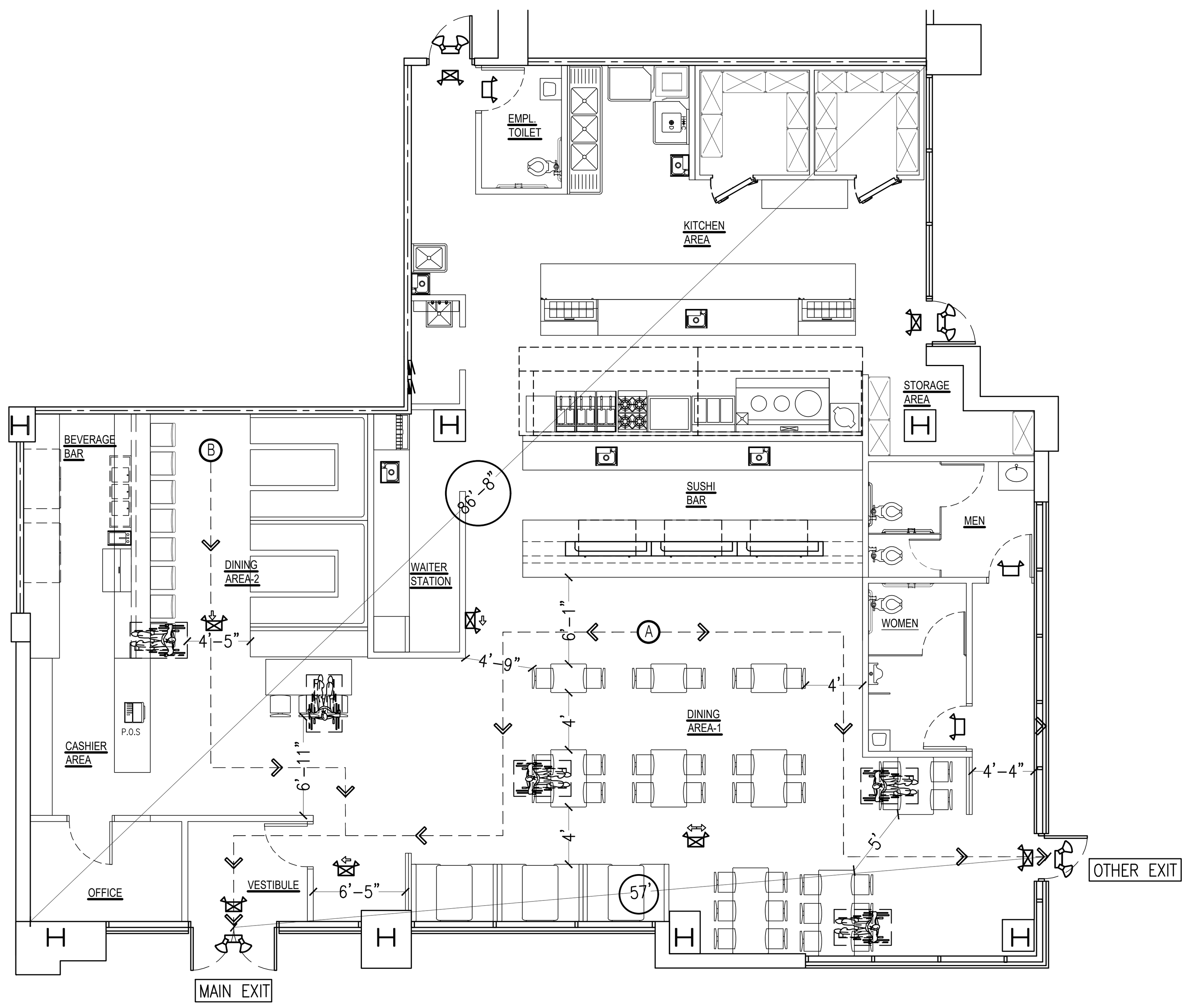

LIFE SAFETY PLAN SCALE: 1/8"=1'-0"

SYMBOL LEGEND

- EXIT/EMERGENCY LIGHT W. BATTER BACK-UP.
- EMERGENCY LIGHT W. BATTERY BACK-UP.
- REMOTE HEAD
- TRAVEL PATH

EGRESS NOTE:

1. NUMBER OF EXITS (PER 2018 IBC SECTION 1006.3.2)
   - REQUIRED: 2
   - PROVIDED: 2
2. EXIT AND ACCESS DOOR WAY (PER 2018 IBC SECTION 1007.1.1)
   REQUIRED: 28'-11" (OVERALL DIAGONAL DISTANCE: 86'-8"/3 FULLY SPRINKLER)
   PROVIDED: 57' > 28'-11" (OKAY)
3. EGRESS WIDTH (PER 2018 IBC, SECTION 1005.3)
   EXIT CAPACITY CALCULATIONS (DOORS)
   112 x 0.2 = 22.4" REQUIRED
   MAIN EXIT PROVIDED: 68" > 11.2" (50% OF THE REQUIRED CAPACITY)
   OTHER EXIT PROVIDED: 34" > 11.2" (50% OF THE REQUIRED CAPACITY)
   TOTAL EXIT PROVIDED: 102" > 22.4" REQUIRED
4. MAXIMUM EXIT ACCESS TRAVEL DISTANCE (PER 2018 IBC, SECTION 1017.2)
   ALLOWED MAX. TRAVEL DISTANCE 250 LF (WITH SPRINKLER SYSTEM)

TRAVEL PATH	EGRESS PATH		MAX. TRAVEL DISTANCE
	A	B	
TO MAIN EXIT	49'	51'	51'-0" (<250' OKAY)
TO OTHER EXIT	43'		

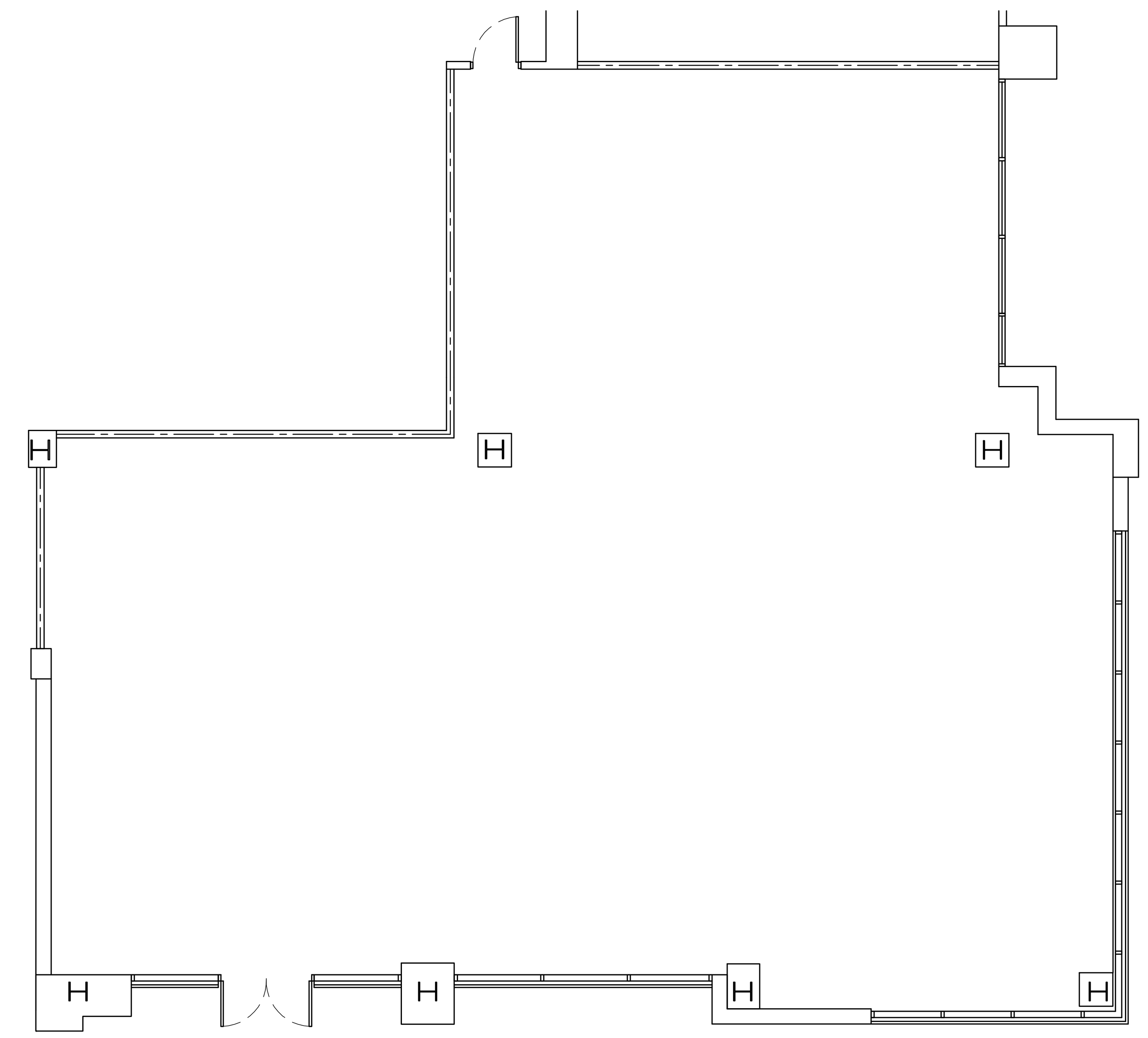

EXISTING FLOOR PLAN SCALE: 1/8"=1'-0"

NOTES:

1. VERIFY ALL PROPOSED AREA WITH THE OWNER, PRIOR TO COMMENCING THAT PART OF WORK.
2. ANY AFFECTED MECHANICAL, PLUMBING AND ELECTRICAL ITEMS IN THE PROJECT, NEED TO BE PROPERLY DONE TO MAINTAIN CONTINUITY OF EXISTING DEVICES OR FIXTURES.
3. ALL WINDOWS, STOREFRONTS, COLUMNS ARE EXISTING TO REMAIN.

FRANK D. MILETO A.I.A.
14 BEAVER BROOK DRIVE, LONG VALLEY, N.J. 07853
Tel:(908) 876-9400 Fax:(908) 876-9455
Email: fmileto@comcast.net

OYOSHI
5803 CENTRE AVE, SPACE 105
PITTSBURGH, PA 15206

REVISIONS

DATE: 10/11/2024
SCALE: AS DRAWING
DRAWN: D.J
JOB NO. C24-045

A-1

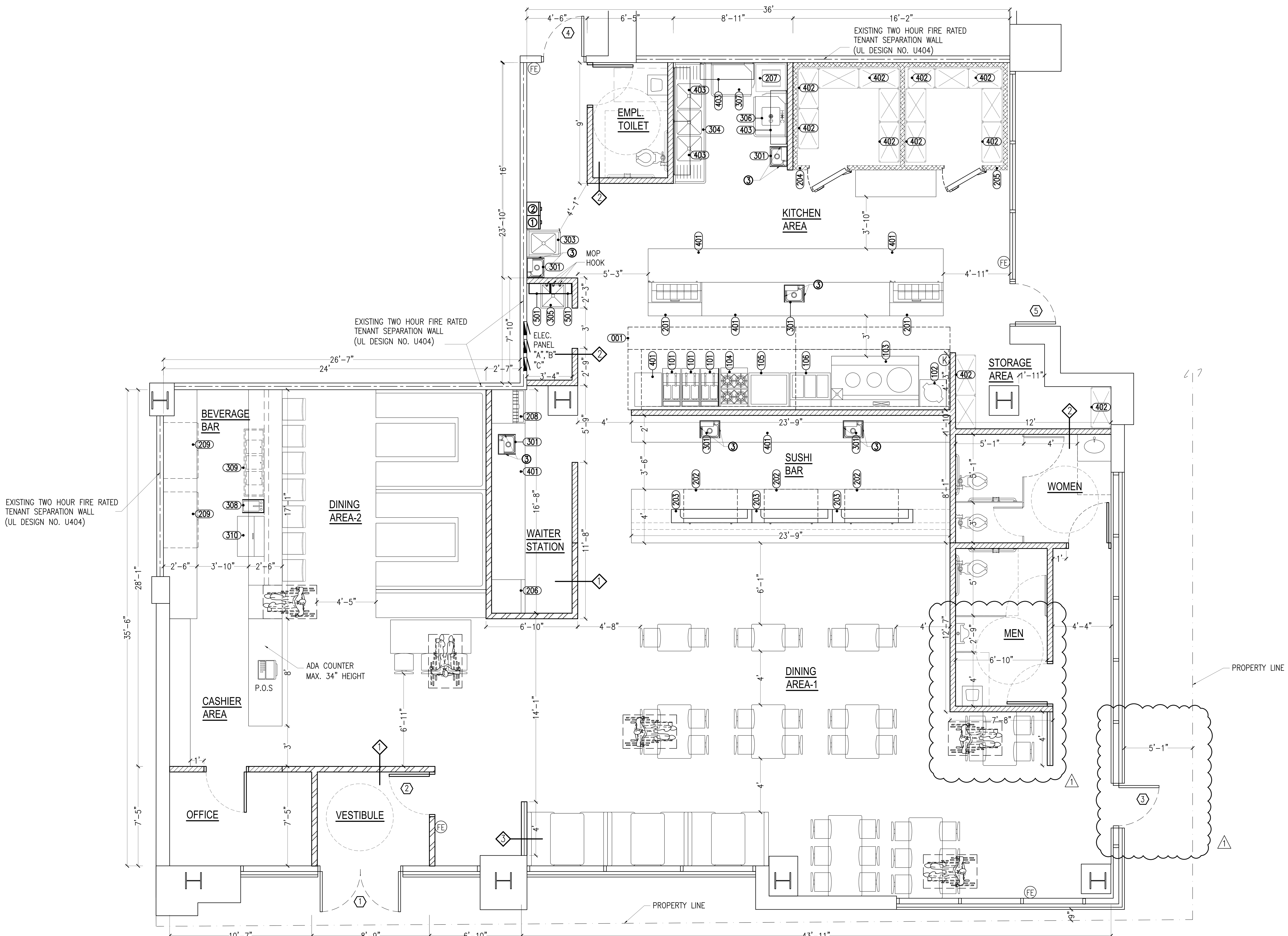

PROPOSED FLOOR PLAN SCALE: 1/4"=1'-0"

SYMBOL LEGEND

- NEW HIGH WALL
- NEW FULL HIGH WALL
- WALL TYPE (REFER TO SHEET A-3 FOR WALL DETAIL)
- EQUIPMENT TAG (REFER TO SHEET A-3 FOR EQUIPMENT SCHEDULE)
- DOOR TAG (REFER TO SHEET A-3 FOR DOOR SCHEDULE)
- FIRE SUPPRESSION PULL STATION MOUNTED AT 44" AFF.
- CLASS "K" FIRE EXTINGUISHER (INSTALL MAX. 40" AFF. TO THE TOP OF THE HANDLE)
- 2A10 "BC" FIRE EXTINGUISHER (INSTALL MAX. 40" AFF. TO THE TOP OF THE HANDLE)
- CABINET FOR EMPLOYEE'S BELONGINGS
- CABINET FOR THE STORAGE OF DETERGENTS, CLEANING COMPOUNDS USED IN THE DAILY OPERATION
- SPLASH GUARD
- STAINLESS STEEL SEPARATOR EXTEND 16" ABOVE DEEP FRYER

FRANK D. MILETO A.I.A.
14 BEAVER BROOK DRIVE, LONG VALLEY, N.J. 07853
Tel:(908) 876-9400 Fax:(908) 876-9455
Email: fmileto@comcast.net

OYOSHI
5803 CENTRE AVE, SPACE 105
PITTSBURGH, PA 15206

REVISIONS
1 01-14-2025 CITY REVIEW

DATE: 10/11/2024
SCALE: AS DRAWING
DRAWN: D.J
JOB NO. C24-045

A-2

DOOR SCHEDULE

	MARK	TYPE	SIZE		MATERIAL	FRAME	FINISH	RATING	REMARKS
1	STORE FRONT (MAIN EXIT)	1	(2) 3'–0" x 7'–0" x 1 3/4"	EXISTING	ALUMINUM & TEMPERED GLASS	ALUM	CLEAR	—	THIS DOOR TO BE UNLOCKED DURING BUSINESS HOURS
2	VESTIBULE	2	3'–0" x 7'–0" x 1 3/4"	NEW	ALUMINUM & TEMPERED GLASS	ALUM	CLEAR	—	THIS DOOR TO BE UNLOCKED DURING BUSINESS HOURS
3	SIDE EXIT (OTHER EXIT)	2	3'–0" x 7'–0" x 1 3/4"	NEW	ALUMINUM & TEMPERED GLASS	ALUM	CLEAR	—	THIS DOOR TO BE UNLOCKED DURING BUSINESS HOURS
4	REAR EXIT	3	3'–0" x 7'–0" x 1 3/4"	EXISTING	HOLLOW METAL	METAL	PAINT	—	PUSH BAR EXIT DEVICE (PANIC HARDWARE)
5	KITCHEN EXIT	2	3'–0" x 7'–0" x 1 3/4"	EXISTING	ALUMINUM & TEMPERED GLASS	ALUM	CLEAR	—	PUSH BAR EXIT DEVICE (PANIC HARDWARE)
6	OFFICE	4	3'–0" x 6'–8" x 1 3/4"	NEW	HOLLOW CORE WOOD	WOOD	PAINT	—	
7	WALK–IN UNITS		3'–0" x 6'–6" x 1 3/4"	NEW	ALUMINUM		CLEAR		INSULATED DOOR (see manufacturer's specs.)
8	TOILET	4	3'–0" x 6'–8" x 1 3/4"	NEW	HOLLOW CORE WOOD	WOOD	PAINT	—	ADA COMPLIANT "MEN" & "WOMEN" SIGN MOUNTING HEIGHT @ 48" AFF
9	LIQUOR ROOM	4	3'–0" x 6'–8" x 1 3/4"	NEW	HOLLOW CORE WOOD	WOOD	PAINT	—	

DOOR NOTES:

1. LATCH SIDE CLEARANCES AT ALL DOORWAYS SHALL BE IN ACCORDANCE WITH ADAAG.
2. ALL EXITS TO BE LABELED.
3. INTERIOR DOORS TO BE LABELED AS TO INTENDED USE.
4. ALL EXIT DOORS SHALL PROVIDE PANIC HARDWARE.
5. THE OPERATING DEVICE ON ALL DOORS SHALL BE CAPABLE OF OPERATION WITH ONE HAND AND SHALL NOT REQUIRE TIGHT GRASPING, TIGHT PINCHING OR TWISTING OF THE WRIST TO OPERATE. THE INTERIOR HINGED DOOR SHALL BE 5.0 POUNDS (22.2 N) MAXIMUM PER ADAAG.
6. ALL DOORS TO BE LEVER TYPE WITH DOOR CLOSERS AND 1/2" THRESHOLD.
7. LANDING SHALL BE PROVIDED AT EVERY REQUIRED EXIT AND THEY SHALL BE A MINIMUM OF 36 INCHES IN WIDTH AND 44 INCHES LONG IN THE DIRECTION OF TRAVEL.

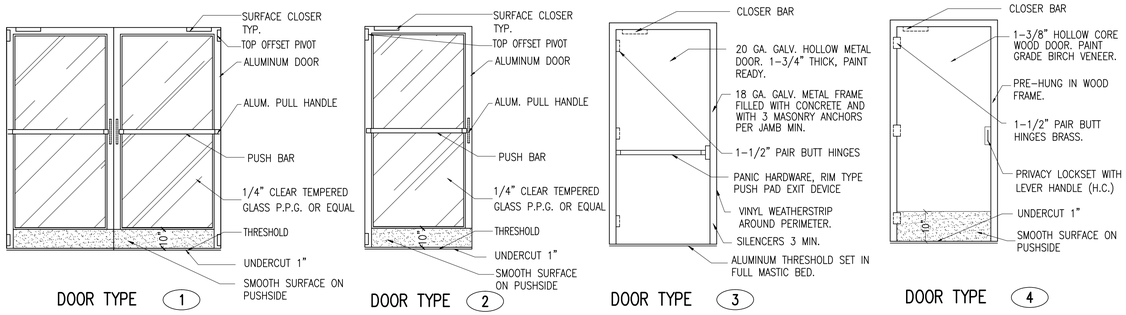

KITCHEN EQUIPMENT SCHEDULE

* ALL APPLIANCES AND FIXTURES SHALL BE LISTED, LABELED AND INSTALLED ACCORDING TO THE MANUFACTURER'S INSTALLATION INSTRUCTIONS OR THE ADOPTED CODES WHICH EVER IS MOST RESTRICTIVE.

NO.	QTY.	DESCRIPTION	MANUFACTURE	MODEL	N.S.F. U.L.	ELECTRICAL VOLT	PHS.	HP.	KW	GAS SIZE	BTUH	WATER C.W.	H.W.	WASTE DIR.	IND.
001	2	EXHAUST HOOD	ECON–AIR	5424 EX–2–PSP–F	U.L.										
101	3	DEEP FRYER	PTICO	SG14	N.S.F.					3/4"	110,000 BTU				
102	1	RICE COOKER	RINNAL	RER–55AS	N.S.F.					3/4"	35,000 BTU				
103	1	CHINESE RANGE STOVE	WIN SUPPLY	WR–300	N.S.F.					1"	300,000 BTU	1/2"			3"
104	1	GAS RANGE STOVE	GARLAND	G24–6S	N.S.F.					3/4"	198,000 BTU				
105	1	GRIDDLE	STAR	636	N.S.F.					3/4"	84,900 BTU				
106	1	STEAM TABLE	DUKE	303	N.S.F.					3/4"	7,500 BTU				
201	2	SANDWICH UNIT	TRUE	TSSU–48–12–HC	N.S.F.	115	1	1/3	0.70						
202	3	SUSHI CASE	TURBO AIR	SAS–70R–N	N.S.F.	115	1		0.56						
203	3	UNDER COUNTER REF.	TRUE	TUC–48	N.S.F.	115	1		0.60						
204	1	WALK–IN COOLER	AMERIKOOLER	8'–0" x 8'–0"	N.S.F.	208	1		2.66						
205	1	WALK–IN FREEZER	AMERIKOOLER	8'–0" x 8'–0"	N.S.F.	208	1		2.98						
206	1	ICE MAKER	HOSHIZAKI	KM–901MAJ	N.S.F.	208	1	3/4	1.56			1/2"			3"
207	1	DISHWASHER	CMA	EST–AH	N.S.F.	115	1		1.92				3/4"		3"
208	1	SODA DISP.	LANCER	IDB 30	N.S.F.	115	1		0.36			1/2"			3"
209	2	BEER COOLER	BEVERAGE AIR	DW49–B–29	N.S.F.	115	1		0.88						
301	6	HAND SINK	EAGLE GROUP	HSA–10–F–LRS	N.S.F.							1/2"	1/2"	2"	
302	—														
303	1	1 COMP. SINK	EAGLE GROUP	414–18–1	N.S.F.							3/4"	3/4"		3"
304	1	3 COMP. SINK	EAGLE GROUP	414–22–3–18	N.S.F.							3/4"	3/4"		3"
305	1	MOP SINK	EAGLE GROUP	F1916	N.S.F.							1/2"	1/2"	3"	
306	1	SOILED DISHTABLE W/ SPRAY SINK	EAGLE GROUP	SDTL–36–16/4	N.S.F.							3/4"	3/4"		3"
307	1	CLEAN DISHTABLE	EAGLE GROUP	CDTR–48–16/4	N.S.F.										
308	1	BAR HAND SINK	EAGLE GROUP	MA2–18	N.S.F.							1/2"	1/2"	2"	
309	1	BAR SERVICE SINK	EAGLE GROUP	B5C–18	N.S.F.							3/4"	3/4"		3"
310	1	ICE CHEST	EAGLE GROUP	B30IC–18	N.S.F.										3"
401		TABLE (Stainless Steel)	EAGLE GROUP	CUSTOM	N.S.F.										
402		SHELF (Stainless Steel)	EAGLE GROUP	1836Z & 1848Z	N.S.F.										
403		WALL MOUNT SHELF (Stainless Steel)	EAGLE GROUP	PWE24	N.S.F.										
501	2	TANKLESS WATER HEATER	BOSCH	TRONIC 6000C WH17	N.S.F.	208	3		15.0						

WALL PENETRATION DETAIL

UL ONLINE CERTIFICATIONS DIRECTORY

System No. W-L-1001
XHEZ.W-L-1001
Through-penetration Firestop Systems

Page Bottom

Design/System/Construction/Assembly Usage Disclaimer

- Authorities Having Jurisdiction should be consulted in all cases as to the particular requirements covering the installation and use of UL Listed or Classified products, equipment, system, devices, and materials.
- Authorities Having Jurisdiction should be consulted before construction.
- Fire resistance assemblies and products are developed by the design submitter and have been investigated by UL for compliance with applicable requirements. The published information cannot always address every construction nuance encountered in the field.
- When field issues arise, it is recommended the first contact for assistance be the technical service staff provided by the product manufacturer noted for the design. Users of fire resistance assemblies are advised to consult the general Guide Information for each product category and each group of assemblies. The Guide Information includes specifics concerning alternate materials and alternate methods of construction.
- Only products which bear UL's Mark are considered as Classified, Listed, or Recognized.

Through-penetration Firestop Systems

See General Information for Through-penetration Firestop Systems

System No. W-L-1001

June 15, 2005

F Ratings — 1, 2, 3 and 4 Hr (See Items 2 and 3)

T Ratings — 0, 1, 2, 3, and 4 Hr (See Item 3)

L Rating At Ambient — less than 1 CFM/sq ft

L Rating At 400 F — less than 1 CFM/sq ft

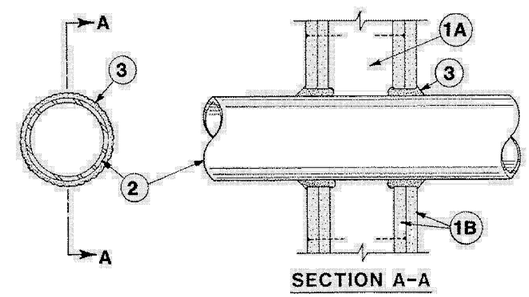

1. **Wall Assembly —** The 1, 2, 3 or 4 hr fire-rated gypsum wallboard/stud wall assembly shall be constructed of the materials and in the manner described in the individual U300 or U400 Series Wall or Partition Designs in the UL Fire Resistance Directory and shall include the following construction features:

A. **Studs —** Wall framing may consist of either wood studs (max 2 h fire rated assemblies) or steel channel studs. Wood studs to consist of nom 2 by 4 in. (51 by 102 mm) lumber spaced 16 in. (406 mm) OC with nom 2 by 4 in. (51 by 102 mm) lumber end plates and cross braces. Steel studs to be min 3-5/8 in. (92 mm) wide by 1-3/8 in. (35 mm) deep channels spaced max 24 in. (610 mm) OC.

B. **Gypsum Board* —** Nom 1/2 or 5/8 in. (13 or 16 mm) thick, 4 ft. (122 cm) wide with square or tapered edges. The gypsum wallboard type, thickness, number of layers, fastener type and sheet orientation shall be as specified in the individual U300 or U400 Series Design in the UL Fire Resistance Directory. Max diam of opening is 26 in. (660 mm).

2. **Through-Penetrant —** One metallic pipe, conduit or tubing installed either concentrically or eccentrically within the firestop system. The annular space between pipe, conduit or tubing and periphery of opening shall be min of 0 in / (0 mm). (point contact) to max 2 in. (51 mm) Pipe, conduit or tubing to be rigidly supported on both sides of wall assembly. The following types and sizes of metallic pipes, conduits or tubing may be used:

A. **Steel Pipe —** Nom 24 in. (610 mm) diam (or smaller) Schedule 10 (or heavier) steel pipe.

B. **Iron Pipe —** Nom 24 in. (610 mm) diam (or smaller) service weight (or heavier) cast iron soil pipe, nom 12 in (305 mm) diam (or smaller) or Class 50 (or heavier) ductile iron pressure pipe.

C. **Conduit —** Nom 6 in. (152 mm) diam (or smaller) steel conduit or nom 4 in (102 mm) diam (or smaller) steel electrical metallic tubing

D. **Copper Tubing —** Nom 6 in. (152 mm) diam (or smaller) Type L (or heavier) copper tubing

E. **Copper Pipe —** Nom 6 in. (152 mm) diam (or smaller) Regular (or heavier) copper pipe.

F. **Through Penetrating Product* —** Flexible Metal Piping The following types of steel flexible metal gas piping may be used:

1. Nom 2 in. (51 mm) diam (or smaller) steel flexible metal gas piping. Plastic covering on piping may or may not be removed on both sides of floor or wall assembly.

OMEGA FLEX INC

2. Nom 1 in. (25 mm) diam (or smaller) steel flexible metal gas piping. Plastic covering on piping may or may not be removed on both sides of floor or wall assembly.

GASTITE, DIV OF TITEFLEX

3. Nom 1 in. (25 mm) diam (or smaller) steel flexible metal gas piping. Plastic covering on piping may or may not be removed on both sides of floor or wall assembly.

WARD MFG L L C

3. **Fill, Void or Cavity Material* — Caulk or Sealant —** Min 5/8. , 1-1/4,1-7/8 and 2-1/2 in. (16, 32, 48 and 64 mm) thickness of caulk for 1, 2, 3 and 4 hr rated assemblies, respectively, applied within annulus, flush with both surfaces of wall. Min 1/4 in. (6 mm) diam bead of caulk applied to gypsum board/penetrant interface at point contact location on both sides of wall. The hourly F Rating of the firestop system is dependent upon the hourly fire rating of the wall assembly in which it is installed, as shown in the following table. The hourly T Rating of the firestop system is dependent upon the type or size of the pipe or conduit and the hourly fire rating of the wall assembly in which it is installed, as tabulated below:

Max Pipe or Conduit Diam In (mm)	F Rating Hr	T Rating Hr
1 (25)	1 or 2	0+, 1 or 2
1 (25)	3 or 4	3 or 4
4 (102)	1 or 2	0
6 (152)	3 or 4	0
12 (305)	1 or 2	0

+When copper pipe is used, T Rating is 0 h.

3M COMPANY — CP 25WB+ or FB-3000 WT.

*Bearing the UL Classification Mark

Last Updated on 2005-06-15

Questions? Print this page Terms of Use Page Top

WALL DETAIL

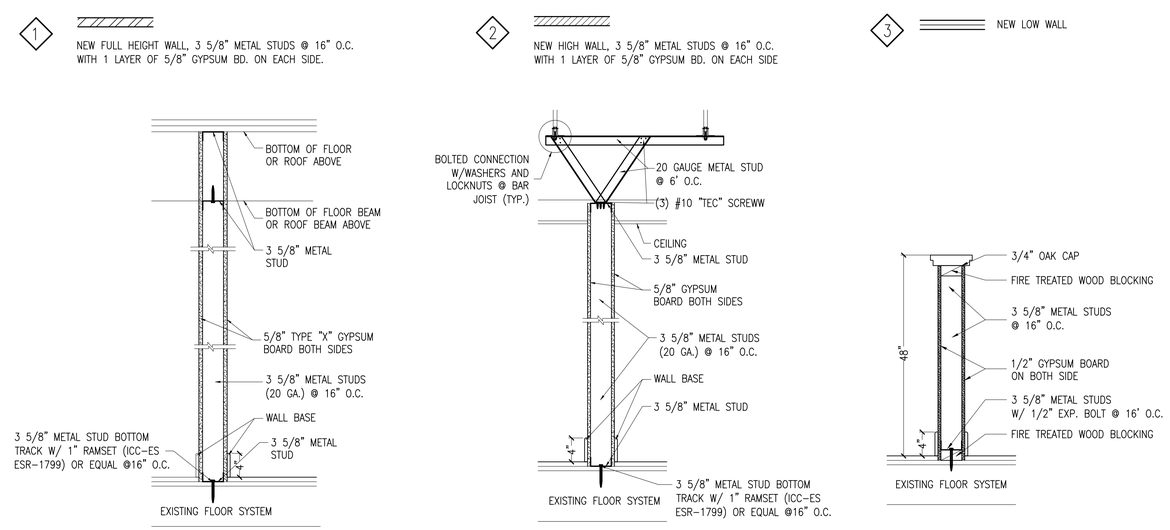

REGISTERED ARCHITECT COMMONWEALTH OF PENNSYLVANIA FRANK D. MILETO
Frank D. Mileto
FRANK D. MILETO A.I.A.
14 BEAVER BROOK DRIVE, LONG VALLEY, N.J. 07853
Tel:(908) 876-8400 Fax:(908) 876-8455
Email: fmileto@comcast.net

OYOSHI
5803 CENTRE AVE, SPACE 105
PITTSBURGH, PA 15206

REVISIONS

DATE: 10/11/2024
SCALE: AS DRAWING
DRAWN: D.J
JOB NO. C24–045

A-3

DOOR MANEUVERING DETAIL

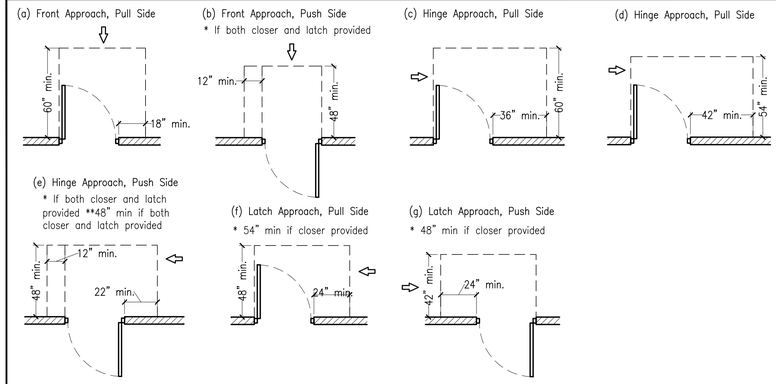

SECTION THRU ADA. SUSHI BAR

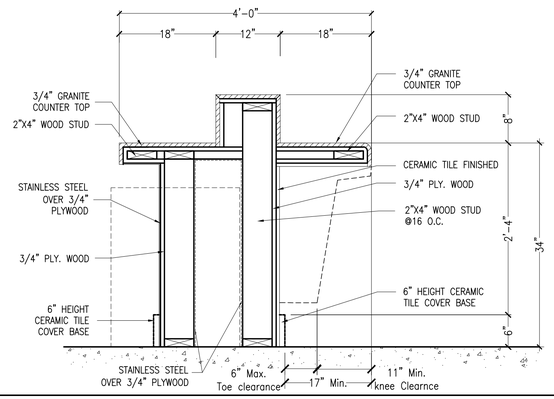

SECTION THRU ADA BEVERAGE BAR

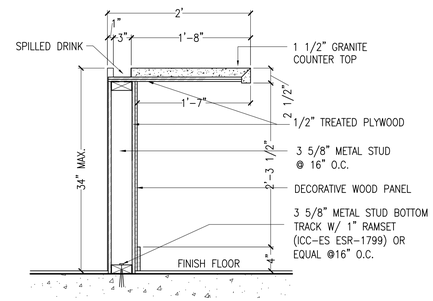

SECTION THRU BEVERAGE BAR

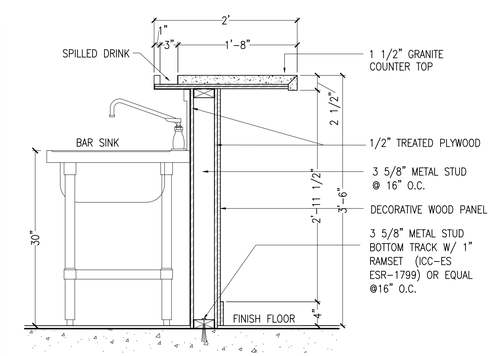

DOOR MANEUVERING DETAIL

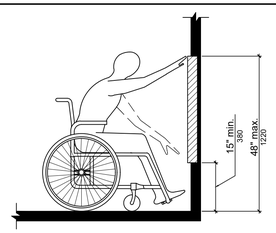

FIG. 308.2.1 UNOBSTRUCTED FORWARD REACH

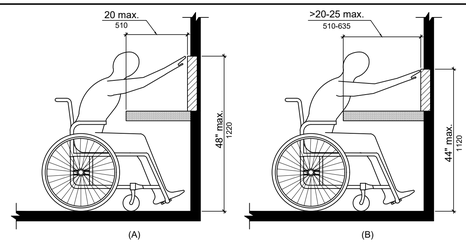

FIG. 308.2.2 OBSTRUCTED HIGH FORWARD REACH

FIG. 305.5 POSITION OF CLEAR FLOOR SPACE

606.3 Height. The front of lavatories and sinks shall be 34 inches (865 mm) maximum above the floor, measured to the higher of the rim or counter surface.
EXCEPTION: A lavatory in a toilet or bathing facility for a single occupant, accessed only through a private office and not for common use or public use, shall not be required to comply with Section 606.3.

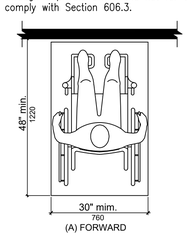

(A) FORWARD

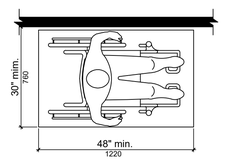

(B) PARALLEL

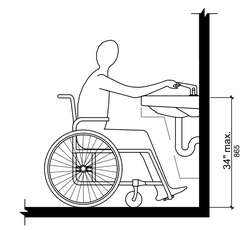

FIG. 606.3 HEIGHT OF LAVATORIES AND SINKS

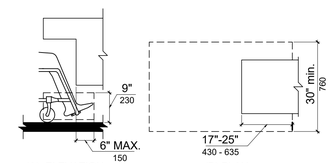

(A) ELEVATION (B) PLAN

FIG. 306.2
TOE CLEARANCE

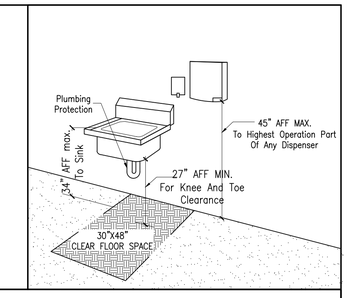

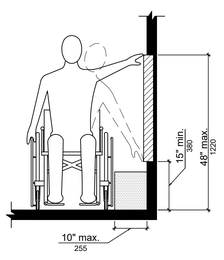

FIG. 308.3.1 UNOBSTRUCTED SIDE REACH

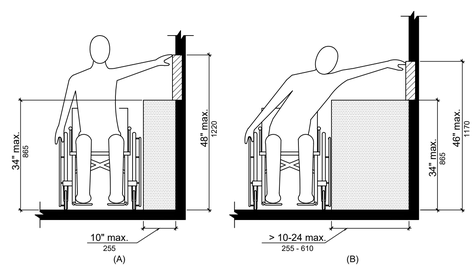

FIG. 308.3.2 OBSTRUCTED HIGH SIDE REACH

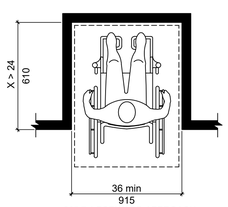

305.7.1 FORWARD APPROACH

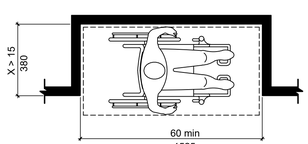

305.7.2 PARALLEL APPROACH

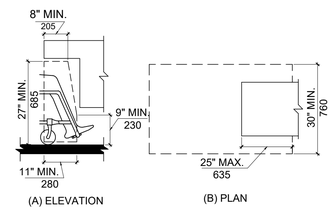

(A) ELEVATION (B) PLAN

FIG. 306.3
KNEE CLEARANCE

ADA COUNTER DETAIL

SERVICE COUNTER
TOTAL LENGTH: 8'-0"
ADA HEIGHT: 2'-10"
TOTAL WIDTH: 2'-6"
MATERIAL: 1" THICK PLYWOOD W/ FRP COATING

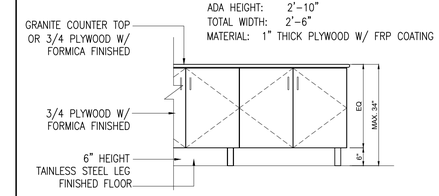

BARRIER FREE DETAIL

NOTE:
Dashed line indicates dimensional clearance of optional under fixture enclosure.

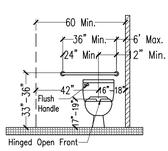

WATER CLOSET FRONT

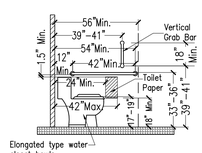

WATER CLOSET SIDE

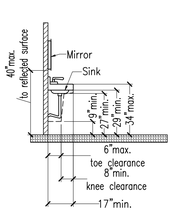

LAVATORY SIDE

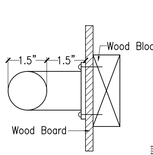

GRAB BAR DETAIL

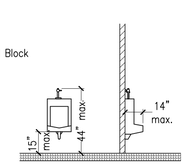

WALL HUNG URINAL DETAIL

NOTE:

TACTILE/BRAILLE EXIT SIGNAGE & RESTROOM SIGNAGE SHALL BE PROVIDED PER ADAAG, SECTION 703 AND SECTION 1011.3 AND E 107 OF BUILDING CODE.

SYMBOLS OF ACCESSIBILITY AND THEIR BACKGROUND SHALL HAVE A NON-GLARE FINISH. SYMBOLS OF ACCESSIBILITY SHALL CONTRAST WITH THEIR BACKGROUNDS, WITH EITHER A LIGHT SYMBOL ON A DARK BACKGROUND OR A DARK SYMBOL ON A LIGHT BACKGROUND.

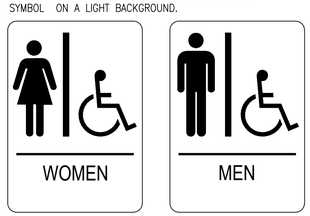

MOUNTING HEIGHT:
CHARACTERS SHALL BE 48 INCHES MINIMUM AND 60 INCHES MAXIMUM ABOVE THE ADJACENT FLOOR OR GROUND SURFACE, MEASURED FROM THE BASELINE OF THE CHARATERS.

MOUNTING LOCATION:
WHERE A TACTILE SIGN IS PROVIDED AT A DOOR, THE SIGN SHALL BE ALONGSIDE THE DOOR ON THE LATCH SIDE.

ADAAG REQUIREMENT NOTES
RESTROOM CONDITIONS

- TOILET PAPER DISPENSERS MUST PERMIT CONTINUOUS PAPER FLOW AND MOUNTED 15" ABOVE FINISHED FLOOR.
- HOT ,COLD WATER AND DRAIN PIPES UNDER LAVATORIES SHALL BE INSULATED OR OTHERWISE CONFIGURED TO PROTECT AGAINST CONTACT.
- THERE SHALL BE NO SHARP OR ABRASIVE SURFACES UNDER LAVATORIES.
- IF SELF CLOSING VALVES ARE USED ON FAUCETS, FAUCETS SHALL REMAIN OPEN FOR A MINIMUM OF TEN SECONDS.
- ALL STRESSES ON GRAB BARS AND COMPONENTS SHALL BE BASED ON 250 LB.
- PAPER TOWEL DISPENSER TO BE LOCATED AT A HEIGHT OF 44" ABOVE FINISHED FLOOR MAXIMUM.
- PROVIDE LOOP TYPE ACCESSIBLE DOOR HARDWARE ON TOILET STALLS.
- PROVIDE SIGNAGE ON RESTROOM DOORS ADJACENT TO LATCH SIDE OF DOOR AT 48" ABOVE FIN. FLOOR.
- TOILET ROOM SIGNS SHALL BE TACTILE/BRAILLE IN COMPLIANCE WITH SECTION 703.
- USE NON-GLARE FINISH GRADE 2 BRAILLE AND RAISED LETTERS (1/32").
- ALL DOORS MIN. WIDTH 2'-8" CLEAR AT 90 DEGREES OPEN.

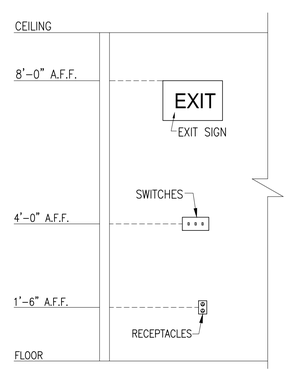

DEVICE MOUNTING HEIGHT DETAIL

NOTE:
EACH DOOR TO AN EXIT SHALL HAVE A TACTILE SIGN, MOUNTING HEIGHT 48" MIN. AND 60" MAX. ABOVE ADJACENT FLOOR OR GROUND SURFACE. INCLUDING RAISED LETTERS AND BRAILLE, STATING: **EXIT**

BRAILLE SHALL BE MOUNTED 48" MIN. – 60" MAX. AFF. TO THE BASELINE OF THE BRAILLE. PER ANSI-A117.1-2020 SECTION 703.4.5

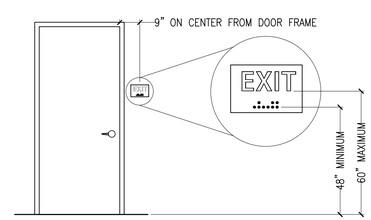

ICC/ANSI SECTION 703.3.10 & SECTION 703.4.5

HEIGHT OF TACTILE CHARACTERS ABOVE FLOOR

MIN. CLEARANCE FOR SEATING AND TABLES

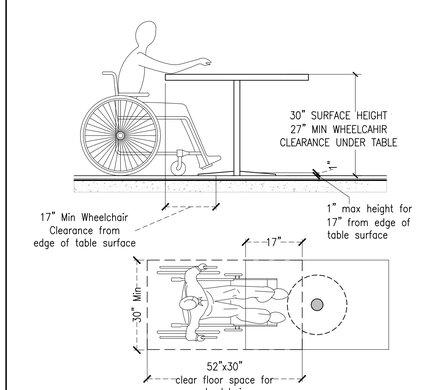

NOTE:

HANDICAP ACCESSIBLE SEATING 5%
OF TOTAL SEATING CAPACITY TOTAL SEATING 98 x 5% = 4.9
5 HANDICAP ACC. SEATS PROVIDED

FRANK D. MILETO A.I.A.
14 BEAVER BROOK DRIVE, LONG VALLEY, N.J. 07853
Tel:(908) 876-9400 Fax:(908) 876-9455
Email: fmileto@comcast.net

OYOSHI
5803 CENTRE AVE, SPACE 105
PITTSBURGH, PA 15206

REVISIONS

DATE: 10/11/2024
SCALE: AS DRAWING
DRAWN: D.J
JOB NO. C24-045

A-4

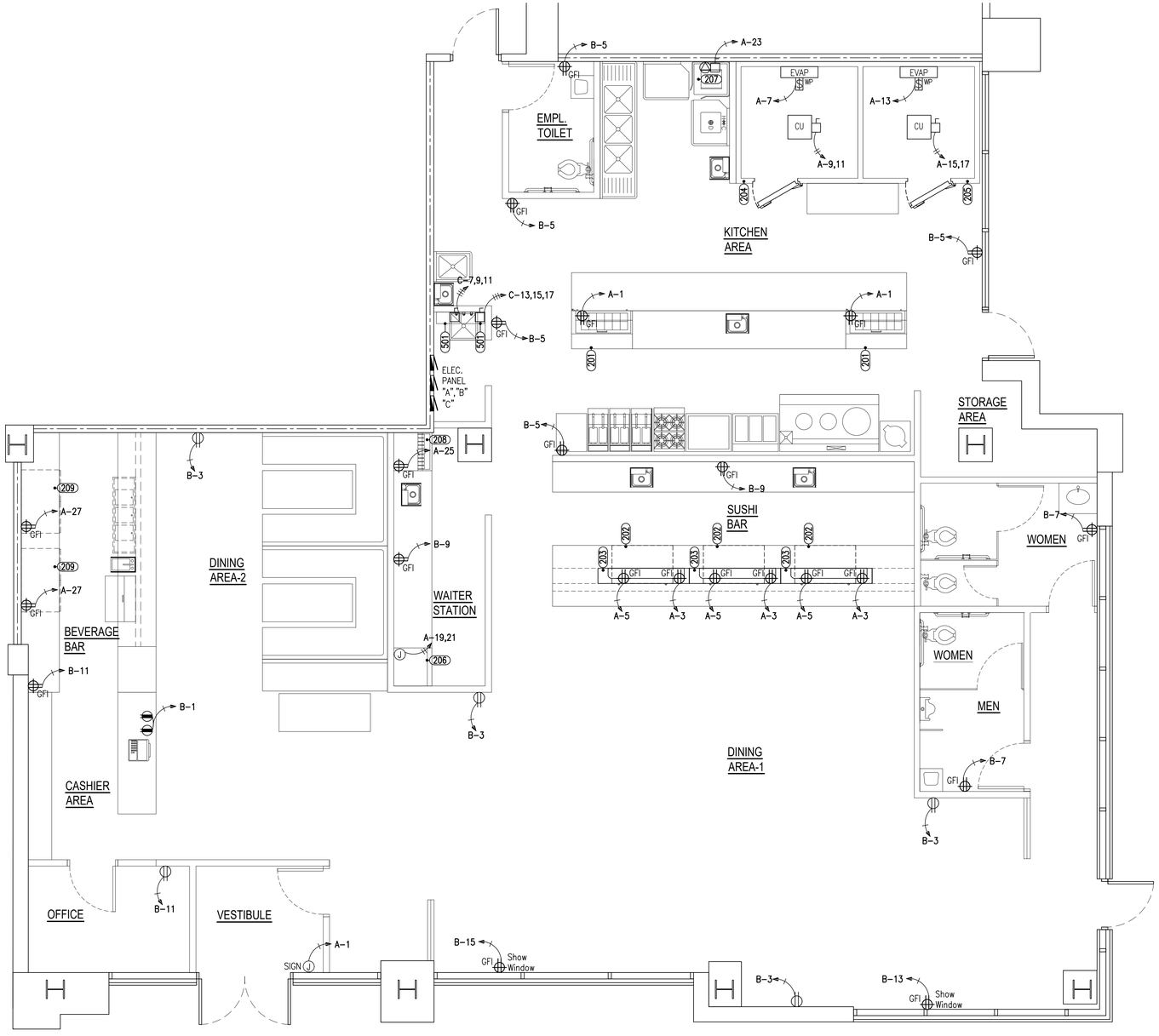

ELECTRICAL FLOOR PLAN SCALE: 1/4"=1'-0"

ELECTRICAL NOTES & REQUIREMENTS

1. ALL WIRING TO COMPLY WITH **N.E.C. 2017** OR LATEST ADOPTED, AND LOCAL REQUIREMENTS.
2. MINIMUM CIRCUIT TO BE 20 AMP. BREAKER, (2) #12 IN 3/4" CONDUIT (+GND) UNLESS SHOWN OTHERWISE.
3. WIRE SIZES BASED ON THE COPPER, A.W.G. ALL WIRES SHALL BE THHN/THWN COPPER. WIRE SMALLER THAN #8 SHALL BE SOLID, #8 AND LARGER STRANDED.
4. PROVIDE DISCONNECTING MEANS AT ALL MOTOR LOADS.
5. VERIFY ALL REQUIREMENTS FOR KITCHEN EQUIPMENT WITH EQUIPMENT SUPPLIER.
6. MAKE ALL FINAL CONNECTIONS.
7. MOUNT ALL ELECTRICAL DEVICES AND SWITCHES AS REQUIRED BY THE ADA AND THE LOCAL STATE BARRIER FREE RULES.
8. FUSE ALL MOTORS AND MOTOR ASSEMBLIES IN A ACCORDANCE WITH THE **N.E.C. 2017** AND MANUFACTURER'S RECOMMENDATIONS.
9. MAINTAIN A MAXIMUM VOLTAGE DROP OF 5% THROUGHOUT THE ENTIRE SYSTEM.
10. COORDINATE ALL WORK WITH ARCHITECTURAL, MECHANICAL, AND PLUMBING TRADES IN FIELD .
11. VERIFY ALL EXISTING JOB CONDITIONS AND ACCOMMODATE AS REQUIRED FOR A COMPLETE INSTALLATION.

ELECTRICAL SYMBOLS LEGEND

NOTE – NOT ALL SYMBOLS MAY BE USED ON PROJECT

SYMBOLS	DESCRIPTION
	DUPLEX RECEPTACLE, MTD. +18" AFF
	240 VOLT RECEPTACLE (HT. AS REQ.)
	QUADRUPLEX RECEPTACLE, MTD. +18"
	COUNTERTOP HT. RECEPTACLE +42"
TR	DUPLEX RECEPTACLE – TAMPER RESIST
WP/GFI	DUPLEX RECEPTACLE – IN WEATHER PROOF ENCLOSURE OR COVER, GROUND FAULT INTERUPTER.
$	SINGLE POLE SWITCH, MTD +47"
$2	DUAL SWITCH, MTD +47"
$D	DIMMER SWITCH, MTD +47"
$OS	SINGLE POLE SWITCH W/ OCCUPANCY SENSOR , MTD +47"
D	DAYLIGHT RESPONSIVE LIGHTING CONTROLS
J	JUNCTION BOX, FLUSH IF POSSIBLE
	DISHWASHER CONNECTION
	DISCONNECT SWITCH W/ STARTER
	DISCONNECT SWITCH
	PANEL – SIZE AS NOTED
F	F–FAN; M–MOTOR; P–PUMP
B–2	CKT. HOMERUN (B INDICATES PANEL) "2" DESIGNATES CIRCUIT NUMBER
	EXIT/EMERGENCY LIGHT W. BATTERY BACK–UP.
	EMERGENCY LIGHT W. BATTERY BACK–UP.
	REMOTE HEAD
	LED PANEL LIGHT
	TRACK LIGHT
	RECESSED LIGHTING FIXTURE
	PENDANT LIGHTING FIXTURE
	HOOD LIGHT
	WALK–IN UNIT LIGHTS

KITCHEN EQUIPMENT SCHEDULE

NO.	QTY.	DESCRIPTION	MANUFACTURE	MODEL	N.S.F. U.L.	ELECTRICAL			
						VOLT	PHS.	HP.	KW
201	2	SANDWICH UNIT	TRUE	TSSU–48–12–HC	N.S.F.	115	1	1/3	0.70
202	3	SUSHI CASE	TURBO AIR	SAS–70R–N	N.S.F.	115	1		0.56
203	3	UNDER COUNTER REF.	TRUE	TUC–48	N.S.F.	115	1		0.60
204	1	WALK–IN COOLER	AMERIKOOLER	8'–0" x 8'–0"	N.S.F.	208	1		2.66
205	1	WALK–IN FREEZER	AMERIKOOLER	8'–0" x 8'–0"	N.S.F.	208	1		2.98
206	1	ICE MAKER	HOSHIZAKI	KM–901MAJ	N.S.F.	208	1	3/4	1.56
207	1	DISHWASHER	CMA	EST–AH	N.S.F.	115	1		1.92
208	1	SODA DISP.	LANCER	IDB 30	N.S.F.	115	1		0.36
209	2	BEER COOLER	BEVERAGE AIR	DW49–B–29	N.S.F.	115	1		0.88
501	2	TANKLESS WATER HEATER	BOSCH	TRONIC 6000C WH17	N.S.F.	208	3		15.0

FRANK D. MILETO A.I.A.
14 BEAVER BROOK DRIVE, LONG VALLEY, N.J. 07853
Tel:(908) 876-9400 Fax:(908) 876-9455
Email: fmileto@comcast.net

OYOSHI
5803 CENTRE AVE, SPACE 105
PITTSBURGH, PA 15206

REVISIONS

DATE: 10/11/2024
SCALE: AS DRAWING
DRAWN: D.J
JOB NO. C24–045

E-1

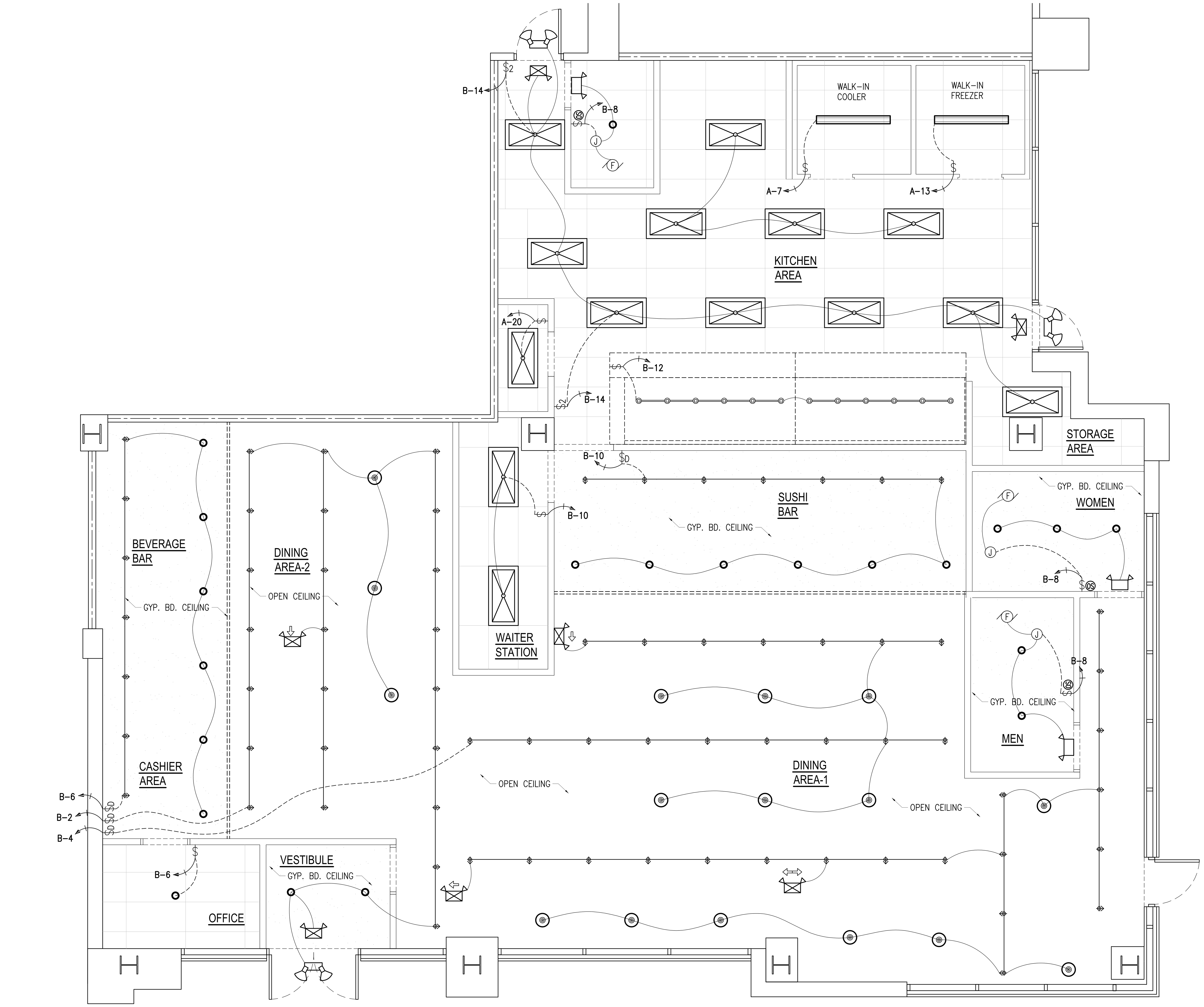

PROPOSED FLOOR PLAN

SCALE: 1/4"=1'-0"

LIGHTING FIXTURE SCHEDULE

FIXTURE TYPE	LEGEND	DESCRIPTION	LAMPS	TOTAL FIXTURE WATTAGE	VOLTAGES	MOUNTED	MANUFACTURER	DETAILS
E1		LED EXIT SIGN	LED	3.3W	120V	WALL/ CEILING WITH MATCHING CANOPY	LITHONIA QUANTUM SERIES	POLYCARBONATE HOUSING WITH SELF-CONTAINED POWER PACK FOR 90 MIN OPERATION. NICAD BATTERY.WHITE HOUSING. RED LETTERS.
E2		EMERGENCY LIGHT	LED	TWO 1.5W/3.6V	120V	WALL MOUNTED 7'-6" A.F.F.	LITHONIA QUANTUM SERIES	POLYCARBONATE HOUSING WITH SELF-CONTAINED POWER PACK FOR 90 MIN OPERATION. NICAD BATTERY.WHITE HOUSING.
E3		OUTDOOR EMERGENCY LIGHT	(2)32TRT	8W	120V	WALL MOUNTED 7'-6" A.F.F.	LITHONIA EMERGENCY 2ELED	UL WET LOCATION LISTED.OPERATE AS A SECONDARY SOURCE FOR A MINIMUM OF 90 MINUTES AFTER NORMAL AC POWER IS INTERRUPTED
A		2x4 LAY-IN FLUORESCENT	32W LED PANEL 125 LUMENS PER WATT	32W	120V	LAY-IN	C-LITE #CPANL 2X4 40LM 35K M2	
B		6" NCANDESCENT LIGHT	LED / 900 LUMENS	13W	120V	RECESSED	EURI LIGHTING	
C		PENDANT LIGHT FIXTURE	(1)-13W LED LIGHT BULB	13W	120V	SUSPENDED MOUNTED FROM ROOF BEAM	CARSON 12" A1898	MOUNT @ 72" AFF
D		TRACK LIGHT	LED PL LAMP 900 LUMENS	13W	120V	CEILING MOUNTED	ALCON ELLO 13303	ARCHITECTURAL LED ADJUSTABLE TRACK LIGHT FIXTURE
E		WALK-IN COOLER & FREEZER LIGHTS	37.7 W LED 4548 LUMENS	37.7W	120-277V	CEILING MOUNTED	KASON 1810LX4000	OPERATING TEMPERATURE RANGE FROM -40 ° F TO 104° F (-40° C TO 40° C). FOR COOLER AND FREEZERS.
F		COMMERCIAL COOKING CANOPY	100 WATTS, A19 BULBS THERMAL AND SHOCK RESISTANT TEMPERED GLASS SILICONE COATED	100W	120V		FLAME GUARD # L55 SERIES	THERMAL SHOCK AND CORROSION RESISTANT SMOOTH SURFACE WIRING AND MATERIAL NOT TO BE EXPOSED WITHIN THE COOKING HOOD

REGISTERED ARCHITECT PENNSYLVANIA FRANK D. MILETO No. B-9728

FRANK D. MILETO A.I.A.
14 BEAVER BROOK DRIVE, LONG VALLEY, N.J. 07853
Tel:(908) 876-9400 Fax:(908) 876-9455
Email: fmileto@comcast.net

OYOSHI
5803 CENTRE AVE, SPACE 105
PITTSBURGH, PA 15206

REVISIONS

DATE: 10/11/2024
SCALE: AS DRAWING
DRAWN: DJ
JOB NO. C24-045

E-2

PANEL: A (NEW) — PANEL SCHEDULE

MAINS: 200A MCB | VOLTAGE: 120/208V | PHASE: 3 | WIRE: 4 | MOUNTING: SURFACE

DESCRIPTION	BREAKER WIRE	BREAKER POLE	BREAKER AMP	WATTS A	WATTS B	WATTS C	CKT NO.	CKT NO.	WATTS A	WATTS B	WATTS C	BREAKER AMP	BREAKER POLE	BREAKER WIRE	DESCRIPTION
2* SANDWICH UNIT (201)	12	1	20	1400			1	2	4104			50	3	8	EX. CU-3
3* SUSHI CASE (202)	12	1	20		1680		3	4		4104					
3* UNDER COUNTER REF. (203)	12	1	20			1800	5	6			4104				
COOLER EVAP. & LTS	12	1	20	480			7	8	6456			60	3	6	EX. AHU-3
WALK IN COOLER COMPRESSOR/CONDENSER (204)	12	2	20		1330		9	10		6456					
						1330	11	12			6456				
FREEZER EVAP. & LTS	12	1	20	480			13	14							SPACE
WALK IN FREEZER COMPRESSOR/CONDENSER (205)	12	2	20		1490		15	16							
						1490	17	18							
ICE MAKER (206)	12	2	20	780			19	20							
					780		21	22							
DISHWASHER (207)	12	1	20			1920	23	24							
SODA DISP. (208)	12	1	20	360			25	26							
BEER COOLER (209)	12	1	20		880		27	28							
SPACE							29	30							
							31	32							
							33	34							
							35	36							
							37	38							
							39	40							
							41	42							
				3500	6160	6540			10560	10560	10560				

TOTAL FOR PHASE	A	14060	117.17	AMPS
	B	16720	139.33	AMPS
	C	17100	142.50	AMPS
TOTAL CONNECTED LOAD:		47880	AMPS:	133.00

PANEL: B (NEW) — PANEL SCHEDULE

MAINS: 200A MCB | VOLTAGE: 120/208V | PHASE: 3 | WIRE: 4 | MOUNTING: SURFACE

DESCRIPTION	BREAKER WIRE	BREAKER POLE	BREAKER AMP	WATTS A	WATTS B	WATTS C	CKT NO.	CKT NO.	WATTS A	WATTS B	WATTS C	BREAKER AMP	BREAKER POLE	BREAKER WIRE	DESCRIPTION
RECEPT. (CASHIER AREA)	12	1	20	720			1	2	381			20	1	12	LTS. (VESTIBULE & DINING AREA-2)
RECEPT. (DINING AREA)	12	1	20		1440		3	4		660		20	1	12	LTS. (DINING AREA-1)
RECEPT. (KITCHEN AREA)	12	1	20			1440	5	6			182	20	1	12	LTS. (OFFICE & BEVERAGE BAR)
RECEPT. (RESTROOM)	12	1	20	1080			7	8	600			20	1	12	LTS. & FAN (CUSTOMER & EMPL. TOILET)
RECEPT. (WAITER & SUSHI BAR)	12	1	20		720		9	10		233		20	1	12	LTS. (WAITER & SUSHI BAR)
RECEPT. (OFFICE & BEVERAGE BAR)	12	1	20			720	11	12			1000	20	1	12	LTS. (HOOD)
RECEPT. (SHOW WINDOW)	12	1	20	1200			13	14	409			20	1	12	LTS. (KITCHEN AREA)
RECEPT. (SHOW WINDOW)	12	1	20		1200		15	16		1200		20	1	12	SIGN
SPACE							17	18							SPACE
							19	20	4104			50	3	8	EX. CU-2
							21	22		4104					
							23	24			4104				
							25	26	6456			60	3	6	EX. AHU-2
							27	28		6456					
							29	30			6456				
							31	32							SPACE
							33	34							
							35	36							
							37	38							
							39	40							
							41	42							
				3000	3360	2160			11950	12653	11742				

TOTAL FOR PHASE	A	14950	124.58	AMPS
	B	16013	133.44	AMPS
	C	13902	115.85	AMPS
TOTAL CONNECTED LOAD:		44865	AMPS:	124.63

PANEL: C (NEW) — PANEL SCHEDULE

MAINS: 200A MCB | VOLTAGE: 120/208V | PHASE: 3 | WIRE: 4 | MOUNTING: SURFACE

DESCRIPTION	BREAKER WIRE	BREAKER POLE	BREAKER AMP	WATTS A	WATTS B	WATTS C	CKT NO.	CKT NO.	WATTS A	WATTS B	WATTS C	BREAKER AMP	BREAKER POLE	BREAKER WIRE	DESCRIPTION
EX. CU-1	8	3	50	4104			1	2	6456			60	3	6	EX. AHU-1
					4104		3	4		6456					
						4104	5	6			6456				
TANKLESS WATER HEATER-1	6	3	60	5000			7	8							SPACE
					5000		9	10							
						5000	11	12							
TANKLESS WATER HEATER-2	6	3	60	5000			13	14							
					5000		15	16							
						5000	17	18							
SPACE							19	20							
							21	22							
							23	24							
							25	26							
							27	28							
							29	30							
							31	32							
							33	34							
							35	36							
							37	38							
							39	40							
							41	42							
				14104	14104	14104			6456	6456	6456				

TOTAL FOR PHASE	A	20560	171.33	AMPS
	B	20560	171.33	AMPS
	C	20560	171.33	AMPS
TOTAL CONNECTED LOAD:		61680	AMPS:	171.33

NOTES:

- EXISTING ELECTRICAL SERVICE AND RISER DIAGRAM NO CHANGE.

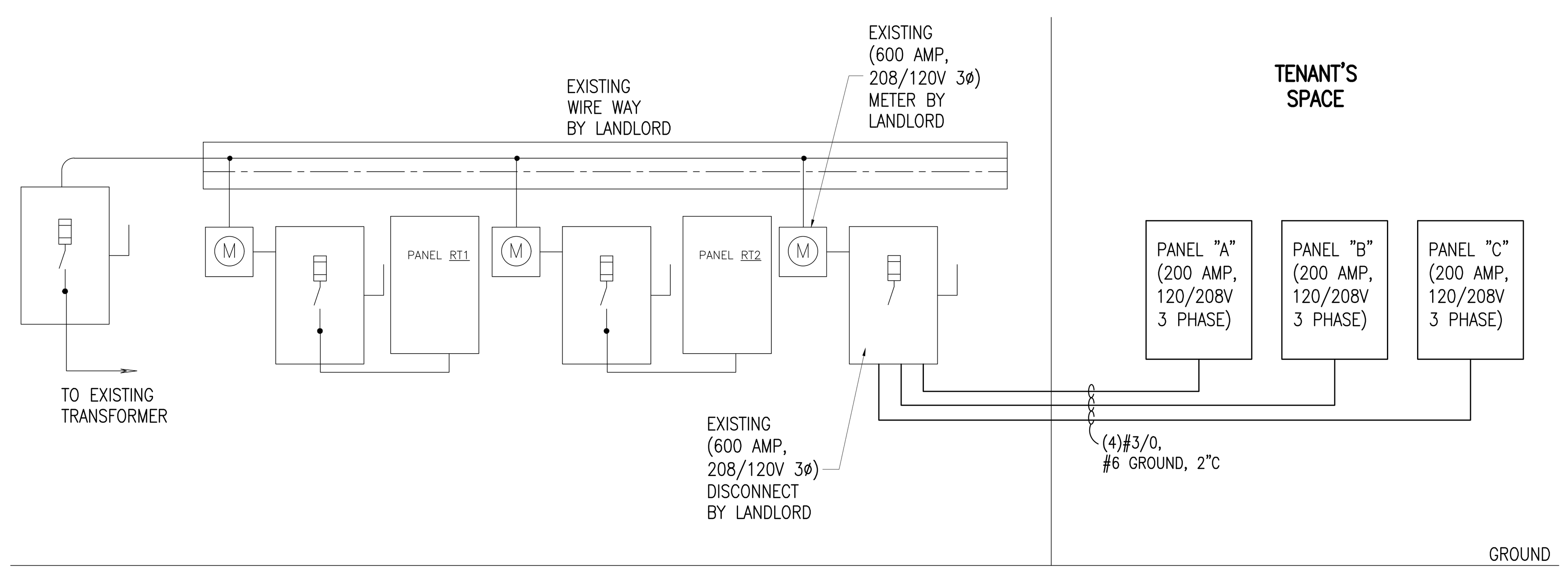

ELECTRICAL RISER DIAGRAM SCALE: N.T.S.

FRANK D. MILETO A.I.A.
14 BEAVER BROOK DRIVE, LONG VALLEY, N.J. 07853
Tel:(908) 876-9400 Fax:(908) 876-9455
Email: fmileto@comcast.net

OYOSHI
5803 CENTRE AVE, SPACE 105
PITTSBURGH, PA 15206

REVISIONS

DATE: 10/11/2024
SCALE: AS DRAWING
DRAWN: D.J
JOB NO. C24-045

E-3

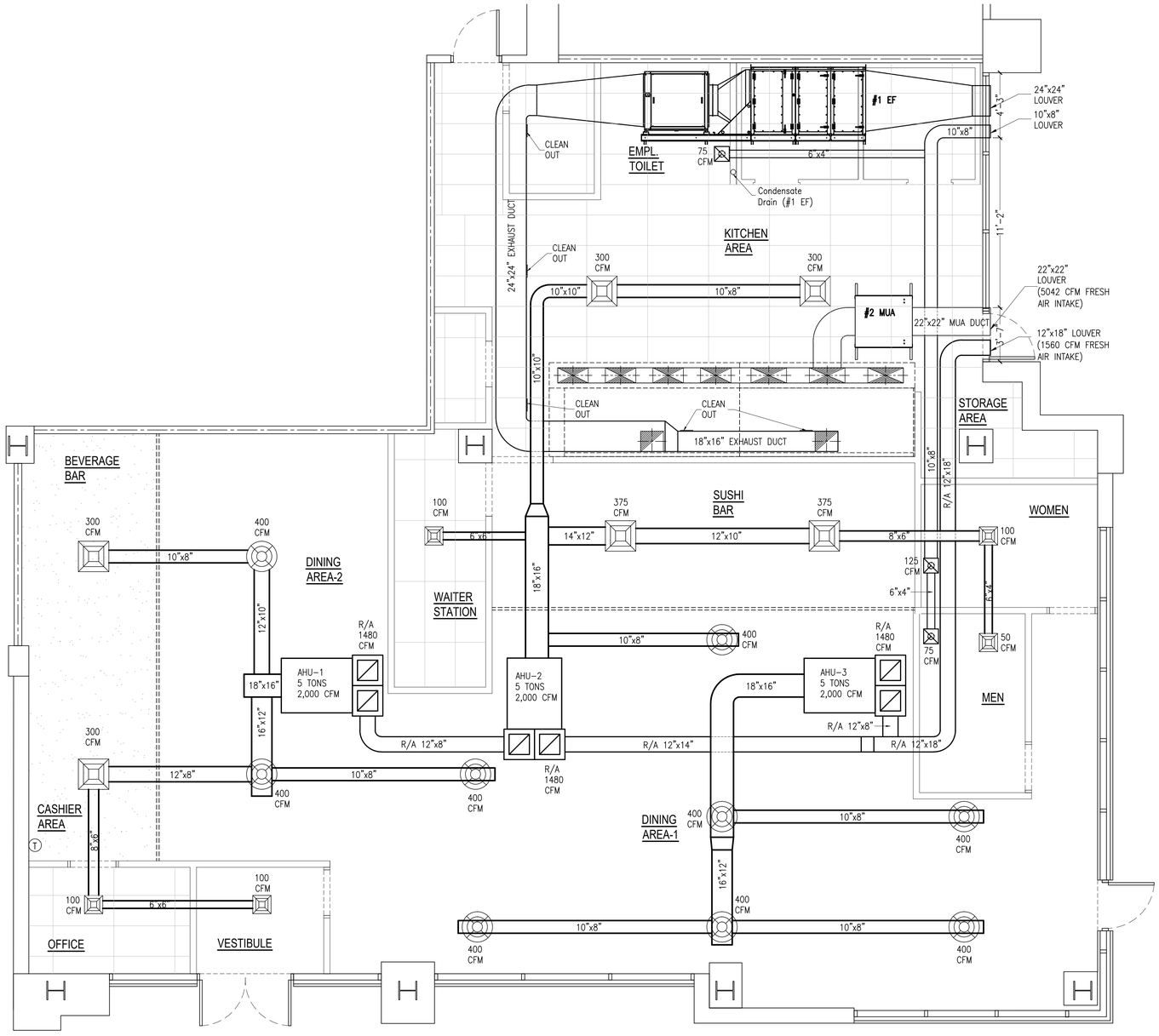

HVAC PLAN SCALE: 1/4"=1'-0"

LEGEND

S/A — HVAC SUPPLY AIR

S/A — HVAC SUPPLY AIR (OPEN CEILING)

R/A — HVAC RETURN AIR DIFFUSER

EXHAUST AIR GRILL

MUA AIR DIFFUSER

(T) PROGRAMMABLE TYPE THERMOSTAT

AIR DISTRIBUTION DUCT		
ø	FROM (CFM)	TO (CFM)
10"	221	400
12"	401	680

NOTE:

SHUT SWITCH SHALL SHUT DOWN FAN MOTOR UPON ALARM SIGNAL FROM ALARM SYSTEM

MECHANICAL NOTES

1. THE CONTRACTOR SHALL EXAMINE ALL OTHER SPECIFICATIONS, DRAINING AND ALL OTHER FEATURES OF BUILDING CONSTRUCTION WHICH MAY AFFECT THIS WORK AND BE GOVERNED BY THESE SPECIFICATIONS, INCLUDING THE GENERAL CONDITIONS AND PARTICULAR INSTRUCTIONS TO ALL BIDDERS AND SUPPLIERS.
2. ALL WORK SHALL BE EXECUTED AND INSPECTED IN STRICT ACCORDANCE WITH ALL LOCAL CODES AND/ OR STATE CODES, LAWS, ORDINANCES, RULES, AND REGULATIONS APPLICABLE TO THIS PARTICULAR CLASS OF WORK, AND EACH CONTRACTOR SHALL INCLUDE IN HIS PRICE ALL SERVICE CHARGES, FEES, PERMITS, ROYALTIES, TAXES, AND OTHER SIMILAR COST IN CONNECTION THEREWITH.
3. PRIOR TO FABRICATION OF DUCTWORK, CONTRACTOR SHALL EXAMINE AND VERIFY ALL CONDITIONS ABOVE AND BELOW THE CEILING WHICH MAY INTERFERE WITH THE DUCT SYSTEM AND NOTIFY THE ARCHITECTS OF ANY CONFLICT ENCOUNTERED. CONTRACTOR SHALL PROVIDE ALL OFFSETS ETC. WHICH MAY BE REQUIRED.
4. ALL SHEET METAL CONSTRUCTION SHALL BE IN STRICT ACCORDANCE WITH "SMACNA" LOW PRESSURE DUCT CONSTRUCTION STANDARDS.
5. TURNING VANES SHALL BE INSTALLED IN ALL BENDS EXCEED 30 DEGREES.
6. ALL DUCTS SHALL BE SUPPORTED WITH 1" WIDE, 16 GAUGE GALVANIZED STEEL BANDS.
7. ALL RECTANGULAR DUCT SHALL BE INSULATED WITH A MINIMUM OF 1" INTERNAL LINER, 2 LB. DENSITY. ALL ROUND DUCT AND DIFFUSER TOP SHALL HAVE A MINIMUM OF 2" FOIL BACKED BLANKET TYPE INSULATION WITH ALL JOINTS BUTTED AND TAPED. INSULATION "R" VALUES SHALL COMPLY WITH GOVERNING ENERGY EFFICIENCY REQUIREMENTS.
8. ALL DUCT DIMENSIONS SHOWN ON PLANS ARE SHEET METAL DIMENSIONS. ALLOWANCE HAS BEEN MADE FOR LINER.
9. CONTRACTOR SHALL COORDINATE LOCATION OF ALL SUPPLY AND RETURN AIR REGISTERS, DUCT, GRILLES, AND DIFFUSERS WITH LIGHTS AND CEILING PATTERNS.
10. SUPPLY AIR DIFFUSERS SHALL BE KRUEGER MODEL 1104 WITH OPPOSED BLADE DAMPERS AND FRAME 23 FOR LAY-IN CEILING.
11. MOUNT THERMOSTAT AT 48" MAXIMUM ABOVE THE FINISHED FLOOR.
12. PROVIDE U.L.F.D. AT ALL DUCT OR AIR DISTRIBUTION PENETRATIONS OF RATED WALLS, FLOORS. OR CEILING ASSEMBLES W/ ACCESS.
13. PROVIDE CONDENSATE DRAIN W/ TRAP AT UNITS WITH DRAIN TO OPN'G BY PLUMBING CONTRACTOR. COORDINATE W/ PLBG. CONTRACTOR.
14. MECHANICAL CONT'R SHALL CONFER W/ ELECTRICAL CONT'R & COORDINATE ALL POWER REQUIREMENT POINTS OR CONNECTION ETC. COORDINATE W/ PLBG. CONTRACTOR TO INSURE PROPER CONDENSATE DRAINS.
15. COVERINGS AND LININGS. COVERINGS AND LININGS, INCLUDING ADHESIVES WHEN USED, SHALL HAVE A FLAME SPREAD INDEX NOT MORE THAN 25 AND A SMOKE-DEVELOPED INDEX NOT MORE THAN 50, WHEN TESTED IN ACCORDANCE WITH ASTM E 84. DUCT COVERINGS AND LININGS SHALL NOT FLAME, GLOW, SMOLDER OR SMOKE WHEN TESTED IN ACCORDANCE WITH ASTM C 411 AT THE TEMPERATURE TO WHICH THEY ARE EXPOSED IN SERVICE. THE TEST TEMPERATURE SHALL NOT FALL BELOW 250°(121°).

FRANK D. MILETO A.I.A.
14 BEAVER BROOK DRIVE, LONG VALLEY, N.J. 07853
Tel:(908) 876-0400 Fax:(908) 876-0455
Email: fmileto@comcast.net

OYOSHI

5803 CENTRE AVE, SPACE 105
PITTSBURGH, PA 15206

REVISIONS

DATE: 10/11/2024
SCALE: AS DRAWING
DRAWN: DJ
JOB NO. C24-045

M-1

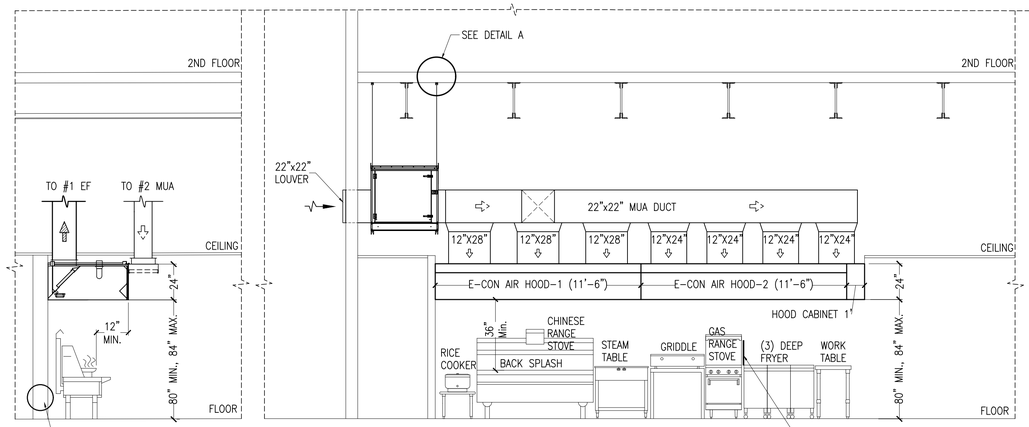

SIDE

FRONT–MUA DUCT

STAINLESS STEEL SEPARATOR EXTEND 16" ABOVE DEEP FRYER

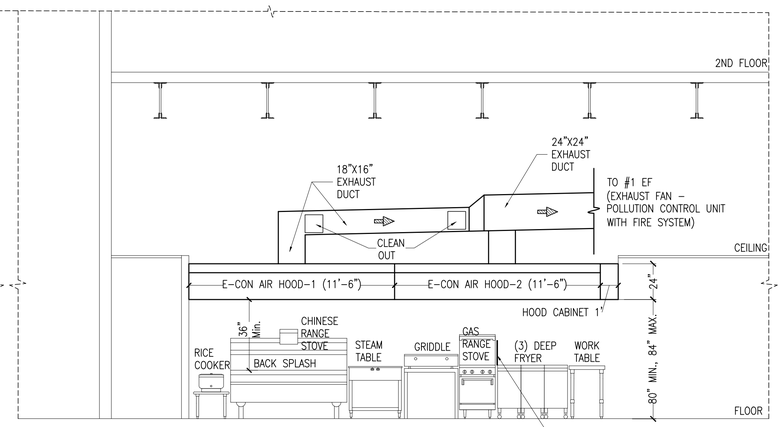

FRONT–EXHAUST DUCT

STAINLESS STEEL SEPARATOR EXTEND 16" ABOVE DEEP FRYER

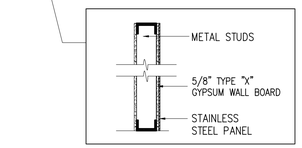

HOOD HANGING DETAIL

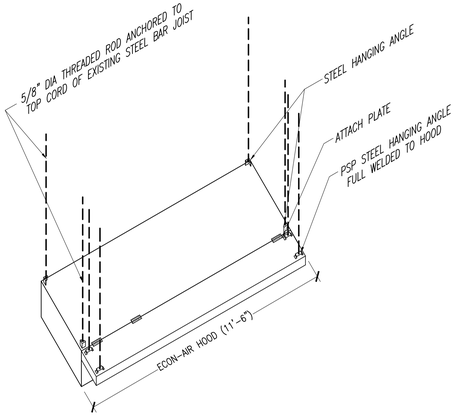

HOOD ISOMETRIC VIEW SCALE: N.T.S.

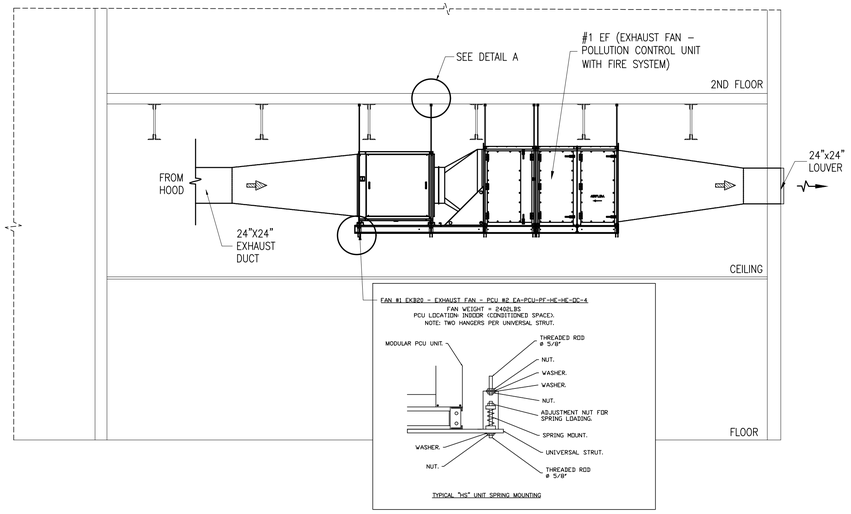

VENTILATION PLAN SCALE: 1/4"=1'-0"

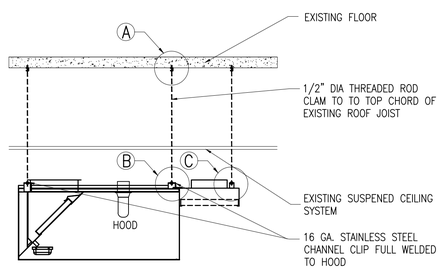

HOOD SECTION SCALE: N.T.S.

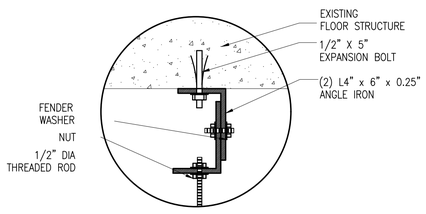

DETAIL A SCALE: N.T.S.

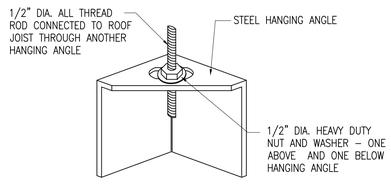

ROD, NUTS, AND WASHERS TO BE SUPPLIED BY INSTALLING CONTRACTOR HANGING ANGLE IS PRE-PUNCHED AT FACTORY

DETAIL B

CORNER HANGING ANGLE

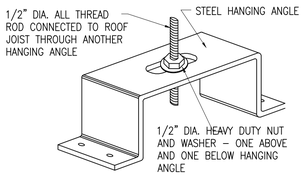

ROD, NUTS, AND WASHERS TO BE SUPPLIED BY INSTALLING CONTRACTOR HANGING ANGLE IS PRE-PUNCHED AT FACTORY

DETAIL C

PSP HANGING ANGLE

GENERAL NOTES

1. VENTILATORS & DUCT SHALL BE DESIGNED, CONSTRUCTED AND INSTALLED IN ACCORDANCE WITH SECTION 506.3.1 THROUGH 506.3.13.3 OF 2021 INTERNATIONAL MECHANICAL CODE.
2. COMMERCIAL KITCHEN EXHAUST HOOD SHALL BE DESIGNED, CONSTRUCTED AND INSTALLED IN ACCORDANCE WITH SECTION 507.1, 507.2, 507.4, 507.5 & 507.6.
3. TYPE I HOODS SHALL CONSTRUCTED OF STEEL NOT LESS THAN 0.0466 INCH (1.181MM) (NO. 18 GAGE) IN THICKNESS, OR STAINLESS STEEL NOT LESS THAN 0.0335 INCH (0.8525MM) (NO. 20 MSG) IN THICKNESS (507.2.3).
4. EXHAUST FAN HOUSING SERVING A TYPE I HOODS SHALL BE CONSTRUCTED OF STEEL (506.5.1). EXHAUST FAN MOTORS SHALL BE LOCATED OUTSIDE OF THE EXHAUST AIRSTREAM (506.5.1.1).
5. GREASE DUCTS SERVING A TYPE I HOOD SHALL BE CONSTRUCTED OF STEEL NOT LESS THAN 0.0575 INCH (1.463 MM) (NO. 16 GAGE) OR STAINLESS STEEL NOT LESS THAN 0.045 INCH (1.14 MM) (NO. 18 GAGE) IN THICKNESS (506.3.1.1). ALL SEAMS, JOINTS, AND PENETRATION OF GREASE DUCTS SHALL BE MADE WITH A CONTINUOUS LIQUID–TIGHT WELD OR BRAZE MADE ON THE EXTERNAL SURFACE OF THE DUCT SYSTEM (506.3.2). DUCT JOINTS SHALL BE BUTT JOINTS OR OVERLAPPING DUCT JOINTS OF EITHER THE TELESCOPING OR BELL TYPE PER (506.3.2.1). DUCT–TO–HOOD JOINTS PER (506.3.2.2), DUCT–TO–EXHAUST FAN CONNECTIONS PER (506.3.2.3), VIBRATION ISOLATION PER (506.3.2.4), AND GREASE DUCT SUPPORTS PER 506.3.3.
6. GREASE DUCT SYSTEMS AND EXHAUST EQUIPMENT SERVING A TYPE I HOOD SHALL HAVE A CLEARANCE TO COMBUSTIBLE CONSTRUCTION OF NOT LESS THAN 18 INCHES (457 MM) (506.3.6).
7. THE FIRE EXTINGUISHER SYSTEM MUST BE INSTALLED BY A LOCAL LICENSED COMPANY. SEPARATE PLAN MUST BE SUBMITTED TO LOCAL FIRE DEPT. FOR APPROVAL.
8. ALL ELECTRICAL WORK MUST BE DONE BY LOCAL LICENSED ELECTRICIAN.
9. FLEXIBLE AIR DUCTS, BOTH METALLIC AND NONMETALLIC, SHALL BE TESTED IN ACCORDANCE WITH UL 181. SUCH DUCTS SHALL BE LISTED AND LABELED AS CLASS 0 OR CLASS 1 FLEXIBLE AIR DUCTS AND SHALL BE INSTALLED IN ACCORDANCE WITH SECTION 603.6.

NOTES

– EXHAUST FAN SHALL BE 10' AWAY FROM ANY INTAKE AIR FAN.

– EXHAUST HOOD FIRE SUPPRESSION CONTRACTOR SHALL SUBMIT SHOP DRAWING FOR APPROVAL AND PERMIT.

– THE EXHAUST AND MAKE–UP AIR SYSTEM SHALL BE ELECTRICALLY INTERLOCKED TO INSURE THAT MAKE–UP AIR IS PROVIDED WHENEVER THE EXHAUST SYSTEM IS IN OPERATION.

SYSTEM INTERCONNECTION (IMC 507.2.1.1)
EXHAUST HOODS SHALL BE AUTOMATICALLY OPERATE DURING COOKING OPERATIONS IN COMMERCIAL KITCHEN BY MEANS OF HEAT SENSORS.

SYSTEM INTERCONNECTION
THE ACTUATION OF THE FIRE SUPPRESSION SYSTEM SHALL AUTOMATICALLY SHUT DOWN THE FUEL OR ELECTRICAL SUPPLY TO THE COOKING EQUIPMENT. THE FUEL AND ELECTRICAL SUPPLY RESET SHALL BE MANUAL.

HOOD CALCULATIONS

AVG COOKING SURFACE TEMP. (°F)	CONFIGURATION	MIN. EXHAUST CFM/FT.
450° F – OVENS, STEAMERS, KETTLES, OPEN–BURNER RANGES, GRIDDLES, FRYERS	SINGLE WALL HOOD 2 WALL HOODS BACK–TO–BACK	150
600° F – GAS CHARBROILERS, ELECTRIC CHARBROILERS, WOKS	SINGLE WALL HOOD 2 WALL HOODS BACK–TO–BACK	200
700° F– MESQUITE GRILLS, CHARCOAL CHARBROILERS, WOOD BURNING APPLIANCES	SINGLE WALL HOOD 2 WALL HOODS BACK–TO–BACK	250

ECON– AIR ISLAND HOOD (ND–2WI) PERFORMANCE (UL 710 LISTED)

AVG COOKING SURFACE TEMP. (°F)	CONFIGURATION	MIN. EXHAUST CFM/FT.
450° F – OVENS, STEAMERS, KETTLES, OPEN–BURNER RANGES, GRIDDLES, FRYERS	SINGLE ISLAND HOOD	269
600° F – GAS CHARBROILERS, ELECTRIC CHARBROILERS, WOKS	SINGLE ISLAND HOOD	300
700° F– MESQUITE GRILLS, CHARCOAL CHARBROILERS, WOOD BURNING APPLIANCES	SINGLE ISLAND HOOD	350

RECOMMENDED DUCT SIZING: EXHAUST – BASED ON 1500 FPM

NOTE: 506.3.4 AIR VELOCITY. GREASE DUCT SYSTEMS SERVING A TYPE I HOOD SHALL BE DESIGNED AND INSTALLED TO PROVIDE AN AIR VELOCITY WITHIN THE DUCT SYSTEM OF NOT LESS THAN 500 FEET PER MINUTE (2.5 M/S).

NOTE: 2018 INTERNATIONAL MECHANICAL CODE, 507.1 EXCEPTION 1 –FACTORY– BUILT COMMERCIAL EXHAUST HOODS WHICH ARE TESTED IN ACCORDANCE WITH UL 710, LISTED, LABELED AND INSTALLED IN ACCORDANCE WITH SECTION 304.1 SHALL NOT BE REQUIRED TO COMPLY WITH SECTIONS 507.4, 507.7, 507.11, 507.12, 507.13, 507.14 AND 507.15.

CALCULATIONS

CALCULATIONS:

HOOD–1 & 2 (CANOPY HOOD)
EXHAUST FAN: 6,302 CFM
EXHAUST DUCT SIZE: 24" X 24"/ 144 = 4.00 SQ. FT.
EXHAUST DUCT AIR VELOCITY: 6,302 / 4.00 = 1,576 FPM

MAKE–UP AIR: 5,042 CFM
MUA DUCT SIZE: 22" X 22"/ 144 = 3.36 SQ. FT.
MUA DUCT AIR VELOCITY: 5,042 / 3.36 = 1,501 FPM

FRANK D. MILETO A.I.A.
14 BEAVER BROOK DRIVE, LONG VALLEY, N.J. 07853
Tel:(908) 876-9400 Fax:(908) 876-9455
Email: fmileto@comcast.net

OYOSHI
5803 CENTRE AVE, SPACE 105
PITTSBURGH, PA 15206

REVISIONS

DATE: 10/11/2024
SCALE: AS DRAWING
DRAWN: D.J
JOB NO. C24–045

M-2

EXISTING SYSTEM AIR HANDLING UNIT SCHEDULE									
MARK	MANUFACTURE	MODEL	SUPPLY AIR	OUTSIDE AIR	FAN	ELECTRICAL DATA			
					H.P.	VOLT.	PHASE	MCA	MOCP
EX. AHU-1	CARRIER	FB4CNP060L00	2,000	520	3/4	208	1	53.8	60
EX. AHU-2	CARRIER	FB4CNP060L00	2,000	520	3/4	208	1	53.8	60
EX. AHU-3	CARRIER	FB4CNP060L00	2,000	520	3/4	208	1	53.8	60

EXISTING SYSTEM HEAP PUMP UNIT SCHEDULE								
MARK	MANUFACTURE	MODEL	COOLING CAPACITY (MBH)	SEER	ELECTRICAL DATA			
					VOLT.	PHASE	MCA	MOCP
EX. CU-1	CARRIER	24ABB360A0N3	55.5	13	208	3	34.2	50
EX. CU-2	CARRIER	24ABB360A0N3	55.5	13	208	3	34.2	50
EX. CU-3	CARRIER	24ABB360A0N3	55.5	13	208	3	34.2	50

OUTSIDE AIR CALCULATION PER 2018 IMC TABLE 403.3.1.1

AREA	OCCUPANT LOAD			OUTDOOR AIR (cfm/person)		OUTDOOR AIR (cfm/sq. ft.)		EXHAUST AIRFLOW RATE CFM/SQ.FT	TOTAL OUTDOOR AIR (cfm)
	SQ. FT.	MAXIMUM OCCUPANT LOAD, PERSON PER 1,000 SQ. FT.	TOTAL OCCUPANT LOAD	OUTDOOR AIR PER PERSON		OUTDOOR AIR PER SQ. FT.			
DINING AREA	1050	70	74	7.5	555	0.18	189		744
SERVICE AREA	420	20	8	7.5	60	0.12	50		110
KITCHEN AREA	620	20	12	7.5	90	0.12	74	0.7 (TABLE BELOW)	164
CIRCULATION AREAS	1490					0.06	89		89
TOTAL									1107
TOTAL OUTDOOR AIR REQUIRED	0.8 (AIR DISTRIBUTION EFFECTIVENESS FACTOR)								1384
TOTAL OUTDOOR AIR PROVIDED									1560

KITCHEN AREA EXHAUST REQUIRED PER 2018 IMC

	SQ. FT.	EXHAUST AIR PER SQ. FT.	EXHAUST AIR REQUIRED	EXHAUST AIR PROVIDED
KITCHEN AREA	620	0.7	434	8400

AIR BALANCE SCHEDULE

UNIT NUMBER	SUPPLY	RETURN	OUTSIDE AIR	EXHAUST AIR
EX. AHU-1	2000	1480	520	
EX. AHU-2	2000	1480	520	
EX. AHU-3	2000	1480	520	
#2 MUA			5042	
#1 EF				6302
#3 EF (TOILET RMS.)				275
TOTAL			6602	6577

EXHAUST DUCT CLEAN OUT DOOR DETAIL

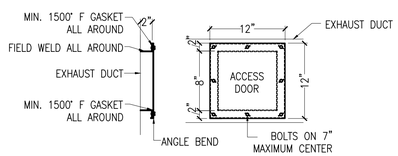

NOTE:
- ACCESS PANEL DOORS ARE CONSTRUCTED OF THE 16 GAUGE CARBON STEEL
- GASKET IS RATED AT 1500 DEGREES F AND PANEL IS LIQUID-TIGHT
- FASTENERS USED TO SECURE THE DOOR TO THE DUCT, DO NOT PENETRATE THE DUCT WALL

RESTROOM EXHAUST FAN DETAIL

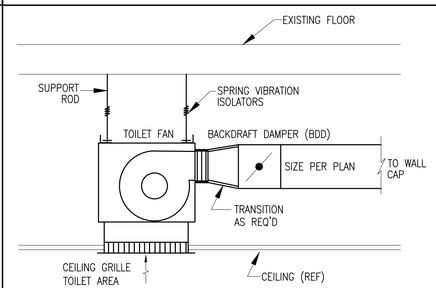

NOTE:
SEE CONTROL SEQUENCE AND SPEC.
FOR FAN OPERATION OR INTERLOCK WITH LIGHT SWITCH

DUCT CONNECTION DETAIL

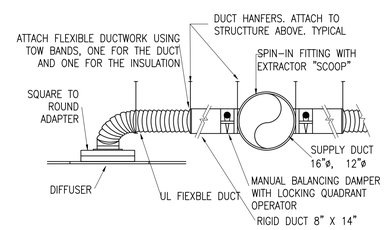

DUCT HANGERS DETAIL WITH SCHEDULE (TYP.)

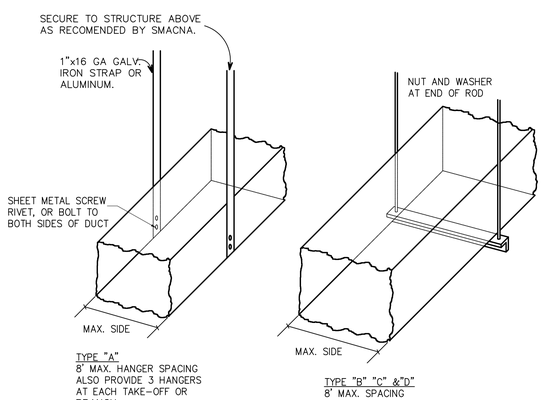

TYPE "A"
8' MAX. HANGER SPACING ALSO PROVIDE 3 HANGERS AT EACH TAKE-OFF OR BRANCH.

TYPE "B" "C" &"D"
8' MAX. SPACING

DUCT SCHEDULE		
DUCT DIM. IN.		HANGER TYPE
1 THRU	12	A
13	18	A
19	30	A/B
31	42	B
43	54	B
55	60	B
61	84	C
85	96	C
OVER	96	D

HAVC UNIT HANGING DETAIL

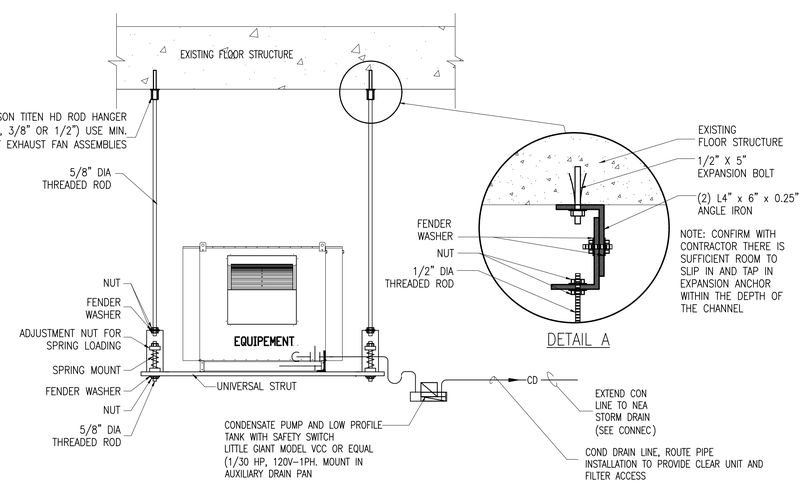

CONDENSATE PAN CONTROL DETAIL

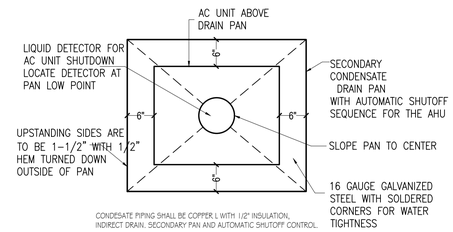

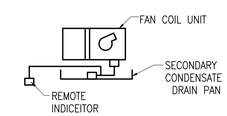

UPON SENSING IMPROPER CONDITIONS, WATER LEVEL
DETECTOR, WD SHALL STOP THE FALL AND DE-ENERGIZE THE COOLING CYCLE
PROVID REMOTE INDICATOR FOR WATER LEVEL DETECTOR ON CEILING OR WALL NEAR UNIT LOCATION

FRANK D. MILETO A.I.A.
14 BEAVER BROOK DRIVE, LONG VALLEY, N.J. 07853
Tel:(908) 876-9400 Fax:(908) 876-9455
Email: fmileto@comcast.net

OYOSHI
5803 CENTRE AVE, SPACE 105
PITTSBURGH, PA 15206

REVISIONS

DATE: 10/11/2024
SCALE: AS DRAWING
DRAWN: DJ
JOB NO. C24-045

M-3

FOR QUESTIONS, CALL THE
NYC Special Accounts
REGION 34
PHONE: (917) 671 - 6534
EMAIL: reg34@econair.com

PATENT NUMBERS

AC-PSP (UNITED STATES) - US PATENT 7963830 B2.
AC-PSP WALL (CANADA) - CA PATENT 2820509.
AC-PSP ISLAND (CANADA) - CA PATENT 2520330.

HOOD INFORMATION – JOB#7051588

HOOD NO	TAG	MODEL	MANUFACTURER	LENGTH	MAX COOKING TEMP	TYPE	APPLIANCE DUTY	DESIGN CFM/FT	TOTAL EXH CFM	EXHAUST PLENUM RISER(S) WIDTH	LENG	HEIGHT	DIA	CFM	VEL	SP	TOTAL SUPPLY CFM	HOOD CONSTRUCTION	HOOD CONFIG END TO END	ROW
1		5424 EX-2-PSP-F	ECON-AIR	11' 5"	600 DEG	I	HEAVY	275	3140	16"	18"	4"		3140	1570	-0.971"	2512	430 SS WHERE EXPOSED	LEFT	ALONE
2		5424 EX-2-PSP-F	ECON-AIR	11' 6"	600 DEG	I	HEAVY	275	3162	16"	18"	4"		3162	1581	-0.984"	2530	430 SS WHERE EXPOSED	RIGHT	ALONE

HOOD INFORMATION

HOOD NO	TAG	FILTER(S) TYPE	QTY	HEIGHT	LENGTH	EFFICIENCY @ 7 MICRONS	LIGHT(S) QTY	TYPE	WIRE GUARD	UTILITY CABINET(S) LOCATION	SIZE	FIRE SYSTEM TYPE	SIZE	ELECTRICAL MODEL #	SWITCHES QUANTITY	FIRE SYSTEM PIPING	HOOD HANGING WEIGHT
1		CAPTRATE SOLO FILTER	8	20"	16"	85% SEE FILTER SPEC	6	RECESSED ROUND	NO							NO	650 LBS
2		CAPTRATE SOLO FILTER	8	20"	16"	85% SEE FILTER SPEC	6	RECESSED ROUND	NO	RIGHT	12"x54"x24"			DCV-1111	1 LIGHT 1 FAN	NO	946 LBS

HOOD OPTIONS

HOOD NO	TAG	OPTION
1		LEFT END STANDOFF (FINISHED) 1" WIDE 54" LONG INSULATED.
2		RIGHT VERTICAL END PANEL 27" TOP WIDTH, 21" BOTTOM WIDTH, 80" HIGH INSULATED 430 SS.

PERFORATED SUPPLY PLENUM(S)

HOOD NO	TAG	POS	LENGTH	WIDTH	HEIGHT	TYPE	RISER(S) WIDTH	LENG	DIA	CFM	SP
1		Front	138"	20"	6"	MUA	12"	28"		837	0.259"
						MUA	12"	28"		837	0.259"
						MUA	12"	28"		837	0.259"
2		Front	150"	20"	6"	MUA	12"	24"		632	0.178"
						MUA	12"	24"		632	0.178"
						MUA	12"	24"		632	0.178"
						MUA	12"	24"		632	0.178"

SPECIFICATION: CAPTRATE• GREASE-STOP• SOLO FILTER

THE CAPTRATE GREASE-STOP SOLO FILTER IS A SINGLE-STAGE FILTER FEATURING A UNIQUE S-BAFFLE DESIGN IN CONJUNCTION WITH A SLOTTED REAR BAFFLE DESIGN, TO DELIVER EXCEPTIONAL FILTRATION EFFICIENCY.

FILTER IS STAINLESS STEEL CONSTRUCTION, AND SIZED TO FIT INTO STANDARD 2-INCH DEEP HOOD CHANNEL(S).

UNITS SHALL INCLUDE STAINLESS STEEL HANDLES AND A FASTENING DEVICE TO SECURE THE TWO COMPONENTS WHEN ASSEMBLED.

GREASE EXTRACTION EFFICIENCY PERFORMANCE SHALL REMOVE AT LEAST 75% OF GREASE PARTICLES FIVE MICRONS IN SIZE, AND 85% GREASE PARTICLES SEVEN MICRONS IN SIZE AND LARGER, WITH A CORRESPONDING PRESSURE DROP NOT TO EXCEED 1.0 INCHES OF WATER GAUGE.

THE CAPTRATE GREASE-STOP SOLO WAS TESTED TO ASTM STANDARD ASTM F2519-05. MANUFACTURER APPROVED FOR USE IN SOLID FUEL APPLICATIONS AS A SPARK ARRESTER.

EFFICIENCY VS. PARTICLE DIAMETER

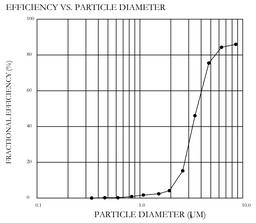

PRESSURE DROP VS. FLOW RATE

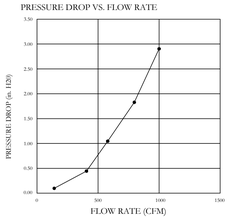

CAPTRATE FILTERS ARE BUILT IN COMPLIANCE WITH:
NFPA #96.
NSF STANDARD #2.
UL STANDARD #1046.
INT. MECH. CODE (IMC).
ULC-S649.

CLEARANCE TO COMBUSTIBLES

HOODS #	SURFACE	*CLEARANCE
1	TOP	18"
	FRONT	0"
	BACK	18"
	LEFT	0"
	RIGHT	18"
2	TOP	18"
	FRONT	0"
	BACK	18"
	LEFT	18"
	RIGHT	0"

- *0" CLEARANCE TO COMBUSTIBLES CONFORMS TO UL710 STANDARD.
- HOOD MOUNTED UTILITY CABINETS REQUIRE 36" SERVICE CLEARANCE.

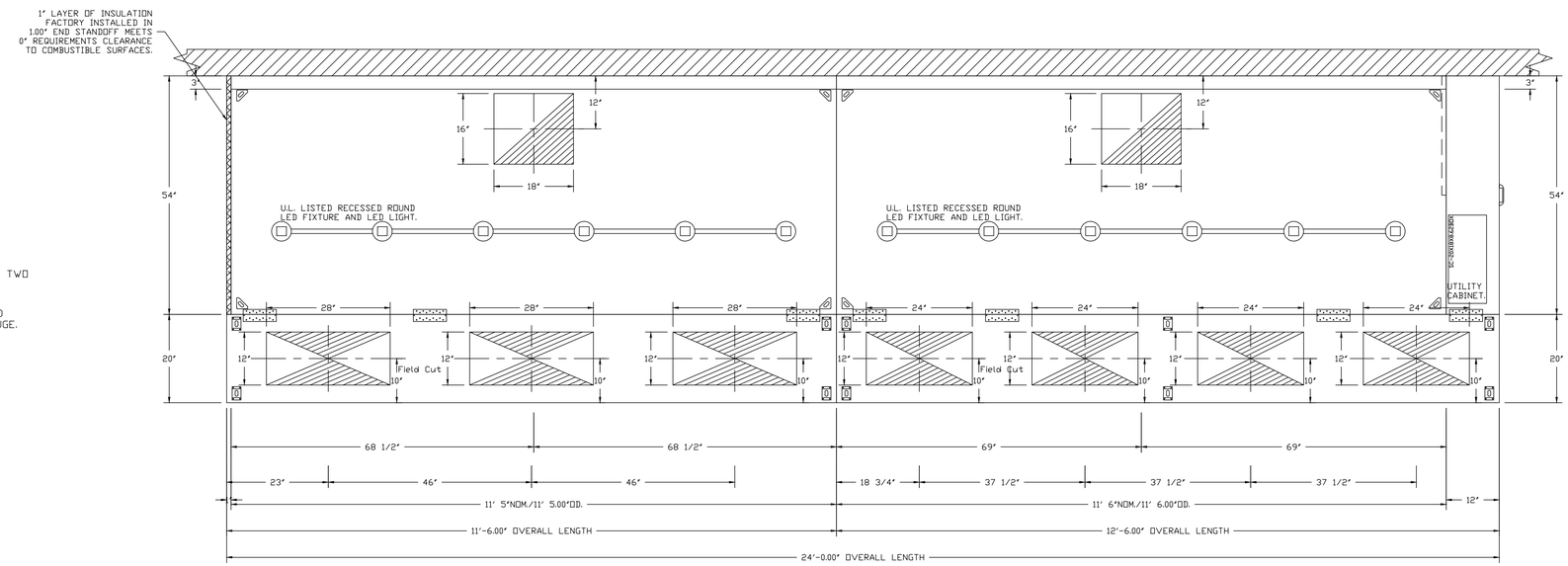

PLAN VIEW – HOOD #1
11' 5.00" LONG 5424EX-2-PSP-F

PLAN VIEW – HOOD #2
11' 6.00" LONG 5424EX-2-PSP-F

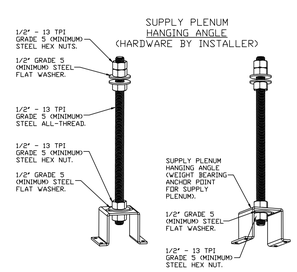

ASSEMBLY INSTRUCTIONS

HANGING ANGLE MUST BE SUPPORTED WITH 1/2" - 13 TPI GRADE 5 (MINIMUM) ALL-THREAD. SANDWICH HANGING ANGLES AND CEILING ANCHOR POINTS WITH 1/2" GRADE 5 (MINIMUM) STEEL FLAT WASHERS AND 1/2" - 13 TPI GRADE 5 (MINIMUM) HEX NUTS AS SHOWN. MUST USE DOUBLED HEX NUT CONFIGURATION ABOVE CEILING ANCHORS. SINGLE HEX NUT BENEATH HANGING ANGLE IS ACCEPTABLE FOR PSP HANGING ANGLES. MAINTAIN 1/4" OF EXPOSED THREADS BENEATH BOTTOM HEX NUT. TORQUE ALL HEX NUTS TO 57 FT-LBS.

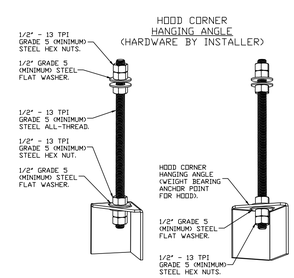

ASSEMBLY INSTRUCTIONS

HANGING ANGLE MUST BE SUPPORTED WITH 1/2" - 13 TPI GRADE 5 (MINIMUM) ALL-THREAD. SANDWICH HANGING ANGLES AND CEILING ANCHOR POINTS WITH 1/2" GRADE 5 (MINIMUM) STEEL FLAT WASHERS AND 1/2" - 13 TPI GRADE 5 (MINIMUM) HEX NUTS AS SHOWN. MUST USE DOUBLED HEX NUT CONFIGURATION BENEATH HOOD HANGING ANGLES AND ABOVE CEILING ANCHORS. MAINTAIN 1/4" OF EXPOSED THREADS BENEATH BOTTOM HEX NUT. TORQUE ALL HEX NUTS TO 57 FT-LBS.

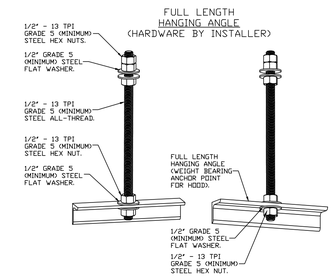

ASSEMBLY INSTRUCTIONS

HANGING ANGLE MUST BE SUPPORTED WITH 1/2" - 13 TPI GRADE 5 (MINIMUM) ALL-THREAD. SANDWICH HANGING ANGLES AND CEILING ANCHOR POINTS WITH 1/2" GRADE 5 (MINIMUM) STEEL FLAT WASHERS AND 1/2" - 13 TPI GRADE 5 (MINIMUM) HEX NUTS AS SHOWN. MUST USE DOUBLED HEX NUT CONFIGURATION ABOVE CEILING ANCHORS. SINGLE HEX NUT BENEATH HANGING ANGLE IS ACCEPTABLE FOR FULL LENGTH HANGING ANGLES. MAINTAIN 1/4" OF EXPOSED THREADS BENEATH BOTTOM HEX NUT. TORQUE ALL HEX NUTS TO 57 FT-LBS.

REVISIONS

DESCRIPTION	DATE:

econ·air
www.econair.com
NYC Special Accounts
315 Gregory Street, Rochester, NY, 14620 PHONE: (917) 671 - 6534 FAX: 9197475605 EMAIL: reg34@econair.com

FRANK D. MILETO A.I.A.
14 BEAVER BROOK DRIVE, LONG VALLEY, N.J. 07853
Tel:(908) 876-8400 Fax:(908) 876-9455
Email: fmileto@comcast.net

Pittsburgh, PA (23') EA
Pittsburgh, PA, 15206

OYOSHI
5803 CENTRE AVE, SPACE 105
PITTSBURGH, PA 15206

DATE: 9/30/2024
DWG.#: 7051588
DRAWN BY: MORABITO
SCALE: 3/4" = 1'-0"
MASTER DRAWING
SHEET NO. 1

REVISIONS

DATE: 10/11/2024
SCALE: AS DRAWING
DRAWN: D.J
JOB NO. C24-045

M-3a

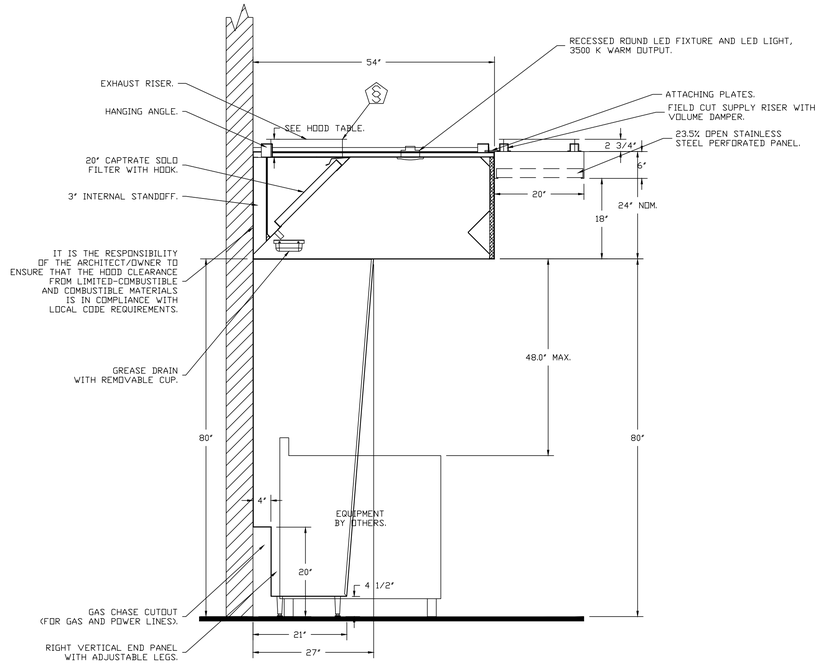

SECTION VIEW – MODEL 5424EX-2-PSP-F
HOOD – #2

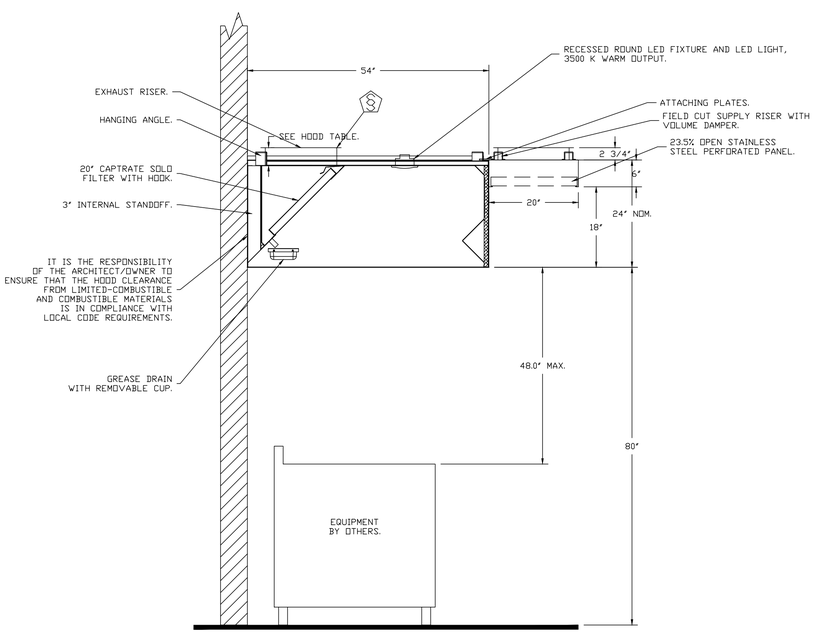

SECTION VIEW – MODEL 5424EX-2-PSP-F
HOOD – #1

POLLUTION CONTROL UNIT FIRE SYSTEM

FAN #1 EASIF30DD-HESS-UL762 – EXHAUST FAN – POLLUTION CONTROL UNIT WITH CORE PROTECTION FIRE SYSTEM INSTALLED. INCLUDES STEEL PRE FILTER MODULE, HIGH EFFICIENCY MERV 15 FILTER MODULE, AND ODOR CONTROL MODULE PREPIPED WITH 25 OL-M NOZZLES AND INCLUDES DOWNSTREAM PROTECTION. ELECTRIC FIRE DETECTOR AND NOZZLES ARE INCLUDED.

– 36 INCHES CLEARANCE REQUIRED IN FRONT OF ALL UTILITY CABINET DOORS.

FIELD PIPING.

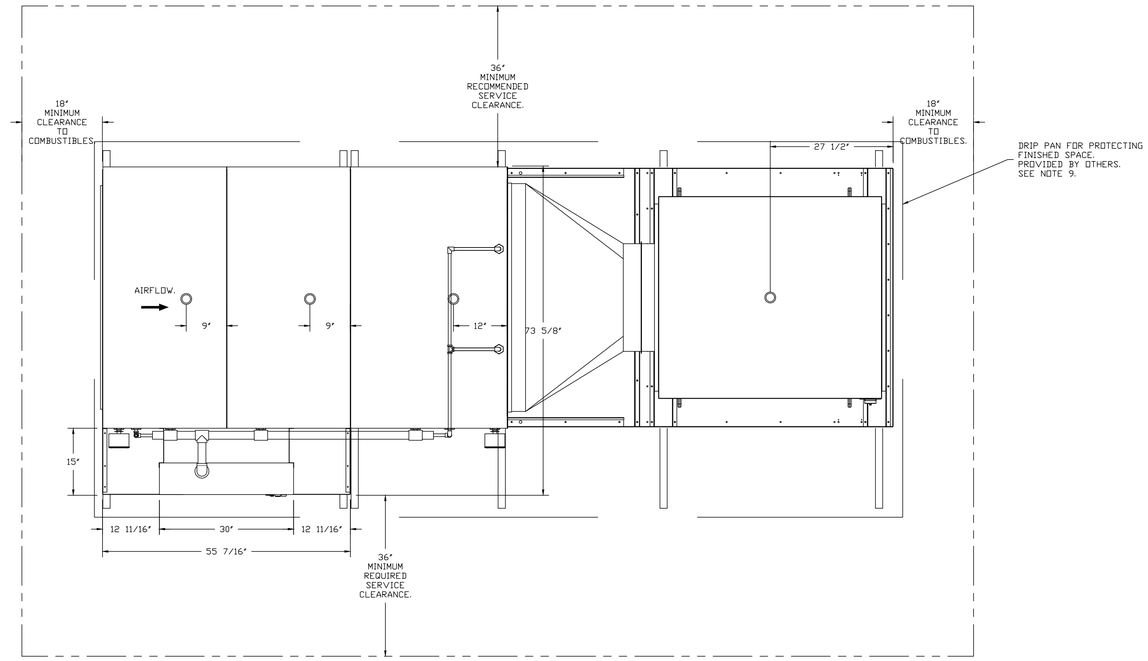

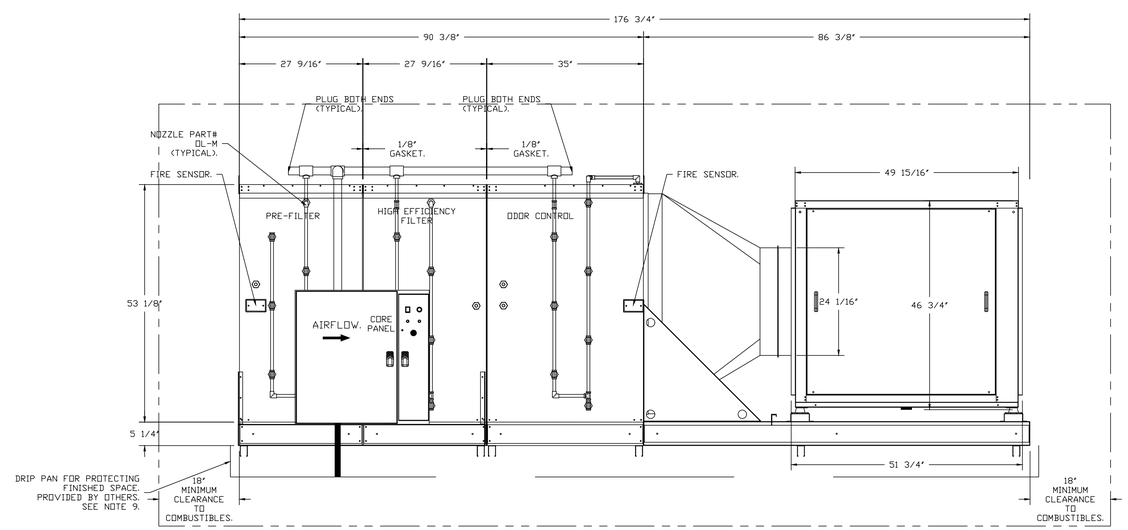

REVISIONS

DESCRIPTION	DATE:

econ·air
www.econair.com
NYC Special Accounts
315 Gregory Street, Rochester, NY, 14620 PHONE: (917) 671 - 6534 FAX: 9197475605 EMAIL: reg34@econair.com

FRANK D. MILETO A.I.A.
14 BEAVER BROOK DRIVE, LONG VALLEY, N.J. 07853
Tel:(908) 876-9400 Fax:(908) 876-9455
Email: fmileto@comcast.net

Pittsburgh, PA (23') EA
Pittsburgh, PA, 15206

DATE: 9/30/2024

DWG.#: 7051588

DRAWN BY: MORABITO

SCALE: 3/4" = 1'-0"

MASTER DRAWING

SHEET NO. 2

OYOSHI
5803 CENTRE AVE, SPACE 105
PITTSBURGH, PA 15206

REVISIONS

DATE: 10/11/2024
SCALE: AS DRAWING
DRAWN: DJ
JOB NO. C24-045

M-3b

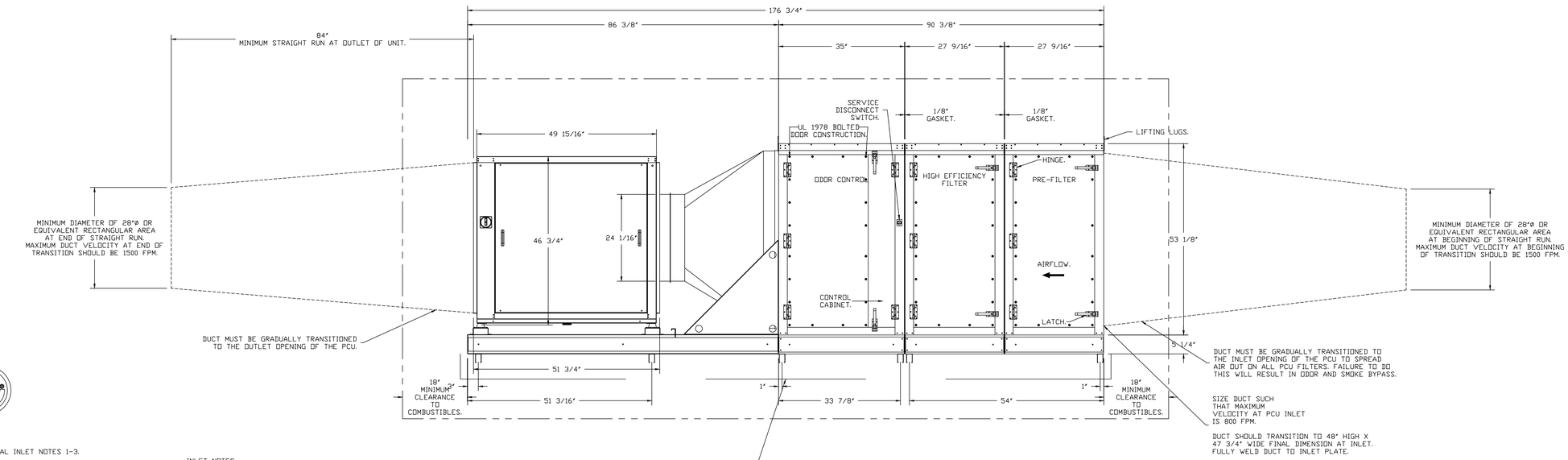

PLEASE REFER TO ADDITIONAL INLET NOTES 1-3.

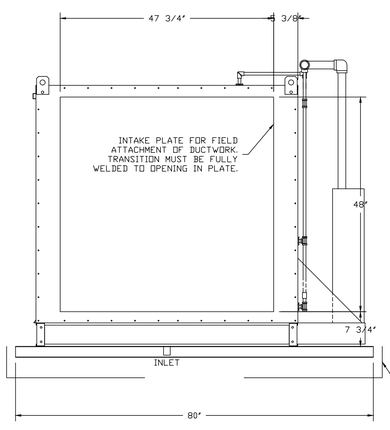

INLET NOTES:
1. LENGTH OF STRAIGHT DUCT ON INLET OF PCU TO BE 3 TIMES THE EQUIVALENT DUCT DIAMETER TO AVOID SYSTEM EFFECT.

2. MAX INLET DUCT VELOCITY TO BE 800 FPM INTO THE PCU. DUCTWORK SHOULD BE SIZED APPROPRIATELY.

3. DUCT MUST BE GRADUALLY TRANSITIONED TO THE INLET OPENING OF THE PCU TO SPREAD AIR OUT ON ALL PCU FILTERS. FAILURE TO DO THIS WILL RESULT IN ODOR AND SMOKE BYPASS.

-A SERVICE PLATFORM MUST BE INSTALLED ON THE FILTER SIDE OF THE UNIT FOR PROPER FILTER MAINTENANCE.
-THE PLATFORM MUST BE THE SAME LENGTH AS THE PCU AND AT LEAST 3 FEET WIDE.
-THE PLATFORM MUST BE STRUCTURALLY SUPPORTED BY THE BUILDING, INDEPENDENT OF THE PCU.
-THE PLATFORM MUST BE DESIGNED TO PROPERLY SUPPORT THE WEIGHT OF ALL PCU FILTERS AND MAINTENANCE PERSONNEL.
-HANDRAILS MUST BE INSTALLED ON THE SERVICE PLATFORM TO PROTECT MAINTENANCE PERSONNEL.

FAN OPTIONS:

- SIF30 - INLET - STANDARD 24" DUCT CONNECTION
- PCU-SIZE 5 SIF-30 HESS
- OPPOSITE SIDE CONTROLS- SIF
- POLLUTION CONTROL UNIT WITH PREFILTER, HIGH EFFICIENCY, AND ODOR CONTROL WITH INSTALLED ELECTRICAL DETECTION SYSTEM. SIZE 5
- SIF30 - STRAIGHT DISCHARGE FOR SIF 30. SQUARE DUCT CONNECTION
- FULL CRATING FOR EXHAUST FANS
- 2 YEAR PARTS WARRANTY

FAN #1 EASIF30DD-HESS-UL762 - EXHAUST FAN - PCU #1 EA-PCU-PF-HE-OC-CPFS-5

FAN WEIGHT = 2184LBS
PCU LOCATION: INDOOR (CONDITIONED SPACE).

NOTE: TWO HANGERS PER UNIVERSAL STRUT.

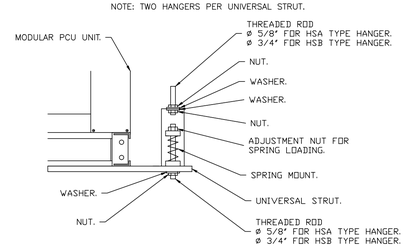

TYPICAL "HS" UNIT SPRING MOUNTING

DESCRIPTION:
FAN #1 EASIF30DD-HESS-UL762 - EXHAUST FAN - POLLUTION CONTROL UNIT WITH CORE PROTECTION FIRE SYSTEM INSTALLED INCLUDES STEEL PRE FILTER MODULE, HIGH EFFICIENCY MERV 15 FILTER MODULE, AND ODOR CONTROL MODULE PREPIPED WITH 25 QL-M NOZZLES AND INCLUDES DOWNSTREAM PROTECTION. ELECTRIC FIRE DETECTOR AND NOZZLES ARE INCLUDED.

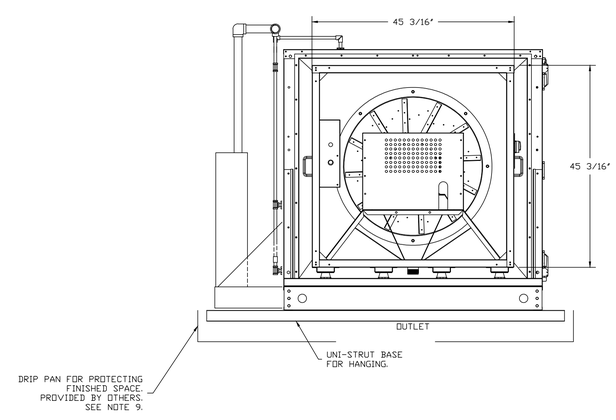

EXHAUST FAN INFORMATION – JOB#7051588

FAN UNIT NO	TAG	QTY	FAN UNIT MODEL #	MANUFACTURER	CFM	ESP	RPM	MOTOR ENCL	HP	BHP	PHASE	VOLT	FLA	WEIGHT (LBS)	SONES
1		1	EASIF30DD	ECON-AIR	6302	2.000	1319	TEFC,PREMIUM	15.000	9.1220	3	208	38.2	2184	40.9

MUA FAN INFORMATION – JOB#7051588

FAN UNIT NO	TAG	QTY	FAN UNIT MODEL #	BLOWER	HOUSING	MIN CFM	DESIGN CFM	ESP	RPM	MOTOR ENCL	HP	BHP	PHASE	VOLT	FLA	MCA	MOCP	WEIGHT (LBS)	SONES
2		1	ETA3-24D	24MF-3-MOD	INLINE.3	3000	5042	0.500	1090	ODP,PREMIUM	5.000	2.5120	3	208	15.8	19.8A	35A	504	7.6

FAN OPTIONS

FAN UNIT NO	TAG	QTY	DESCRIPTION
1		1	SIF30 - INLET - STANDARD 24" DUCT CONNECTION
		1	PCU-SIZE 5 SIF-30 HESS
		1	OPPOSITE SIDE CONTROLS- SIF
		1	POLLUTION CONTROL UNIT WITH PREFILTER, HIGH EFFICIENCY, AND ODOR CONTROL WITH INSTALLED ELECTRICAL DETECTION SYSTEM. SIZE 5
		1	SIF30 - STRAIGHT DISCHARGE FOR SIF 30. SQUARE DUCT CONNECTION
		1	FULL CRATING FOR EXHAUST FANS
		1	2 YEAR PARTS WARRANTY
2		1	INLINE3 INDOOR HANGING OPTION - INCLUDES 2 HSA200 HANGING SPRING ISOLATORS PER UNI-STRUT
		1	2 YEAR PARTS WARRANTY

FAN ACCESSORIES

FAN UNIT NO	TAG	EXHAUST			SUPPLY			
		GREASE CUP	GRAVITY DAMPER	WALL MOUNT	SIDE DISCHARGE	GRAVITY DAMPER	MOTORIZED DAMPER	WALL MOUNT
2					YES			

NOTES:
1. ALL DIMENSIONS ARE NOMINAL AND GIVEN IN INCHES.

2. C/US UL710 LISTED FOR GREASE DUCT INSTALLATION.

3. UL762 RATED DIRECT DRIVE SQUARE INLINE FAN WITH 30.875" HIGH EFFICIENCY MIXED FLOW WHEEL.

4. WHEN USED IN KITCHEN GREASE DUCT, UNIT MUST BE INSTALLED DOWNSTREAM OF A LISTED HOOD ASSEMBLY OF A UL710 LISTED HOOD ASSEMBLY OR A NFPA 96 COMPLIANT HOOD AS LONG AS IT IS INSTALLED WITH A FIRE SUPPRESSION SYSTEM THAT IS INTERLOCKED WITH THE NFPA 96 COMPLIANT HOOD FIRE SYSTEM.

5. CLEARANCE ON FILTER ACCESS SIDE OF THE PCU SHOULD BE A MINIMUM OF 36" FOR PROPER SERVICE OF THE UNIT. ALL OTHER SIDES SHOULD FOLLOW CLEARANCE TO COMBUSTIBLE GUIDELINES PER CODE.

6. UNIT CONTAINS PRESSURE MONITORING SWITCH. REFER TO ELECTRICAL SCHEMATIC OR OPERATION MANUAL FOR MORE INFORMATION.

7. 1.5" NPT DRAIN SUPPLIED IN EACH MODULE BASE. CONNECT INDIVIDUAL DRAINS TO A COMMON 3" DRAIN AND ROUTE TO GREASE INTERCEPTOR.

8. FIRE SYSTEM TO BE INSTALLED INDOORS OR IN A WEATHERTIGHT ENCLOSURE MAINTAINED BETWEEN 32° AND 130° F. THIS ENCLOSURE IS PROVIDED BY OTHERS.

9. WHEN THE PCU IS INSTALLED ABOVE OR NEAR A FINISHED SPACE, THE INSTALLING CONTRACTOR MUST PROTECT THE FINISHED SPACE TO PREVENT WATER DAMAGE IN THE EVENT OF A FIRE SYSTEM DISCHARGE OR WHEN REGULAR CLEANING IS PERFORMED ON THE UNIT.

10. POLLUTION CONTROL UNIT IS RATED FOR INDOOR USE WHEN INSTALLED IN ACCORDANCE WITH IMC 506.5.2.4, INCLUDING THE USE OF A FIRE RATED ENCLOSURE AS APPLICABLE.

PCU OPTIONS:
- FULL CRATING FOR POLLUTION CONTROL UNITS FOR SHIPPING.
- INDOOR HANGING CRADLE FOR SIZE 5 PCU WITH 3 OR 4 MODULES AND USBI BLOWER. 6 PIECES OF UNI-STRUT, 80 INCHES LONG EACH. 2 HSB450 HANGING ISOLATORS PER UNI-STRUT INCLUDED. FOR USE WITH USBI BLOWERS.

- PCUAFM WITH HMI SCREEN, BACK PLATE WITH LABEL, AIRLINES/ QUICK CONNECTS/ AIR PROBES, CONDUIT/ FITTINGS/WIRING HARNESS.
- CORE PANEL FACTORY MOUNTED ON BACK SIDE OF PCU. CORE FIRE SENSORS FACTORY WIRED AND ALL NOZZLES FACTORY PIPED.
- UNIVERSAL BALL VALVE SUPERVISION SWITCH KIT FOR 1-1/2" PIPE, INCLUDES BALL VALVE.
- INTAKE PLATE FOR SIZE 5 PCU WITH 47 3/4" X 48" HOLE FOR DUCT CONNECTIONS FOR USE WITH CUSTOM DUCT FITMENT OR FIELD FITMENT.
- UL 1978 BOLTED DOOR DESIGN FOR PCU DOORS- INCLUDES CAGE NUTS AND BOLTS.

PCU FILTER SPECIFICATIONS					
DESIGN CFM - 6302					
MODULE	FILTER TYPE	FILTER EFFICIENCY	QTY	SIZE	SP(CLEAN) (in WC)
1	CAPTRATE SOLO	MERV 8	12	20X25X2	0.398
2	HIGH EFFICIENCY	MERV 15	12	20X25X4	0.261
3	OC 100% CARBON	N/A	12	20X25X4	0.749
					1.408

REVISIONS

DESCRIPTION	DATE:

econ·air
www.econair.com
NYC Special Accounts
315 Gregory Street, Rochester, NY, 14620 PHONE: (917) 671 - 6534 FAX: 9197475605 EMAIL: reg34@econair.com

FRANK D. MILETO A.I.A.
14 BEAVER BROOK DRIVE, LONG VALLEY, N.J. 07853
Tel:(908) 876-9400 Fax:(908) 876-9455
Email: fmileto@comcast.net

Pittsburgh, PA (23') EA
Pittsburgh, PA, 15206

OYOSHI
5803 CENTRE AVE, SPACE 105
PITTSBURGH, PA 15206

DATE: 9/30/2024

DWG.#: 7051588

DRAWN BY: MORABITO

SCALE: 3/4" = 1'-0"

MASTER DRAWING

SHEET NO. 3

REVISIONS

DATE: 10/11/2024
SCALE: AS DRAWING
DRAWN: DJ
JOB NO. C24-045

M-3c

FAN #2 ETA3-24D - SUPPLY FAN
1. INLINE SUPPLY UNIT W/ 24" DIRECT DRIVE FAN IN SIZE #3 HOUSING. INSULATED HOUSING.
2. SIDE DISCHARGE - AIR FLOW RIGHT -> LEFT.
3. INDOOR HANGING CRADLE FOR THE SIZE 3 UNTEMPERED INLINE UNIT. 2 HSA200 HANGING ISOLATORS PER UNI-STRUT INCLUDED.
4. HINGED DOUBLE WALL INSULATED DOOR ASSEMBLY (BURNER/BLOWER SECTION).
5. 2 YEAR PARTS WARRANTY.

*NOTE: SUPPLY DUCT MUST BE INSTALLED TO MEET SMACNA STANDARDS. A MINIMUM STRAIGHT DUCT LENGTH MUST BE MAINTAINED DOWNSTREAM OF UNIT DISCHARGE AS OUTLINED IN AMCA PUBLICATION 201. WHEN USING RECTANGULAR DUCTWORK, ELBOWS MUST BE RADIUS THROAT, RADIUS BACK WITH TURNING VANES. FLEXIBLE DUCTWORK AND SQUARE THROAT/SQUARE BACK ELBOWS SHOULD NOT BE USED. ANY TRANSITION AND/OR TURNS IN THE DUCTWORK WILL CAUSE SYSTEM EFFECT. SYSTEM EFFECT WILL DRASTICALLY INCREASE STATIC PRESSURE AND REDUCE AIRFLOW. DO NOT RELY ON UNIT TO SUPPORT DUCT IN ANY WAY. FAILURE TO PROPERLY SIZE DUCTWORK MAY CAUSE SYSTEM EFFECTS AND REDUCE PERFORMANCE OF THE EQUIPMENT.
SUGGESTED STRAIGHT DUCT SIZE IS 30" x 30".

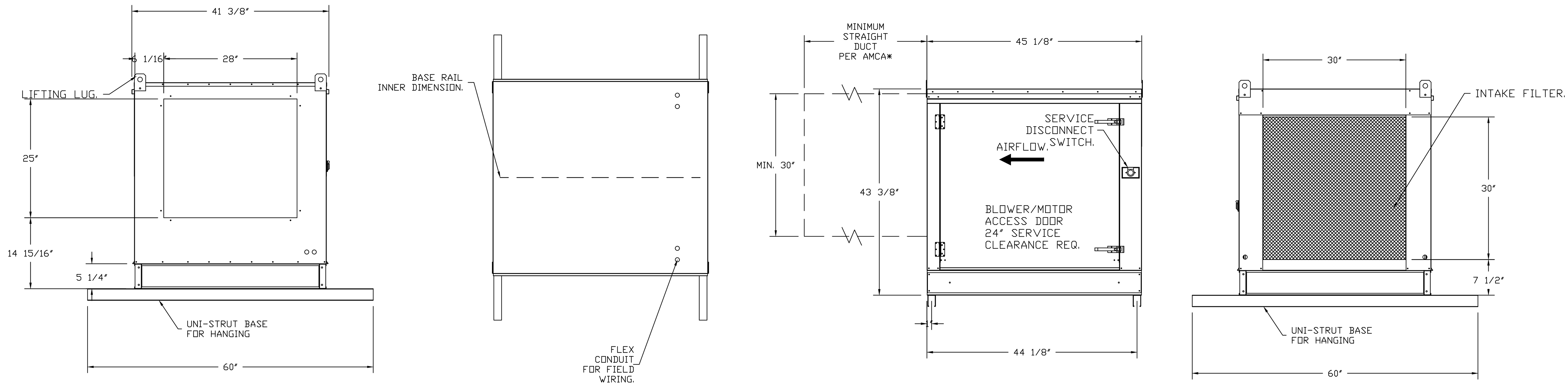

AirHandler Wiring

AirHandler Wiring	JOB 7051588 - Pittsburgh, PA (23') EA		
DRAWING NUMBER A7051588-2	SHIP DATE 9/30/2024	MODEL ETA3-24D	

!ATTENTION ELECTRICIAN!
DROP FOR DISCONNECT CONNECTION
IS FACTORY SUPPLIED
CONNECT POWER TO THE DROP

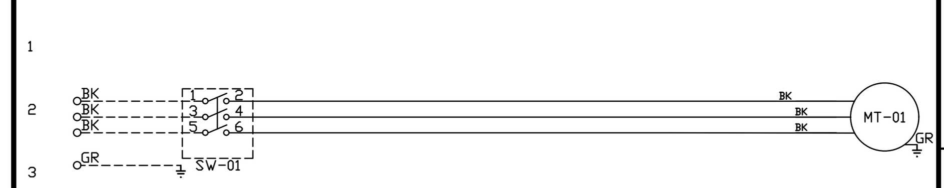

Installed Options

Component Identification

Label	Description	Location
MT-01	Supply motor	[2]
SW-01	Main disconnect switch	[2]

MOTOR INFO
SUPPLY 5.0HP-208V-3P-15.8FLA
VFD PART: ESV402N02TXB571

ELECTRICAL INFORMATION
MOTOR/CTRL CIRCUIT MCA: 19.8A
MOTOR/CTRL CIRCUIT MOP: 35A

NOTES
----- DENOTES FIELD WIRING
——— DENOTES INTERNAL WIRING

** 14 AWG

WIRE COLOR
BK-BLACK YW - YELLOW RD - RED
BL-BLUE GR - GREEN WH - WHITE
BR - BROWN GY - GRAY PK - PINK
OR - ORANGE PR - PURPLE

Exhaust Fan Wiring

Exhaust Fan Wiring	JOB 7051588 - Pittsburgh, PA (23') EA		
DRAWING NUMBER EXH7051588-1	SHIP DATE 9/30/2024	MODEL EASIF30DD	

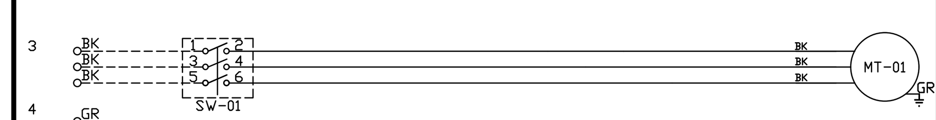

Installed Options

Component Identification

Label	Description	Location
MT-01	Fan Motor	[3]
SW-01	Main disconnect switch	[3]

MOTOR INFO
EXHAUST 15.0HP-208V-3P-38.2FLA
VFD PART: ESV113N02TXB571

ELECTRICAL INFORMATION
MOTOR/CTRL MCA: 47.8A
MOTOR/CTRL MOP: 80A

NOTES
----- DENOTES FIELD WIRING
——— DENOTES INTERNAL WIRING

WIRE COLOR
BK - BLACK YW - YELLOW
BL - BLUE GR - GREEN
BR - BROWN GY - GRAY
OR - ORANGE PR - PURPLE
RD - RED PK - PINK
WH - WHITE

PCU Advanced Filter Monitoring

PCU Advanced Filter Monitoring	JOB NAME Pittsburgh, PA (23') EA	DATE 9/30/2024
DRAWING NUMBER PCU#1-7051588-1	JOB NUMBER 7051588	MODEL PCU #1 on Fan #1

FOR STANDARD CONTROL PANEL, CONNECT HI, NI P2 TO LIKE TERMINALS IN ELECTRICAL CONTROL PACKAGE
FOR SC OR DCV, CONNECT CAT-5 CABLE FROM RJ-45 INSIDE PCU TO J3 OF ECPM03 PCB.

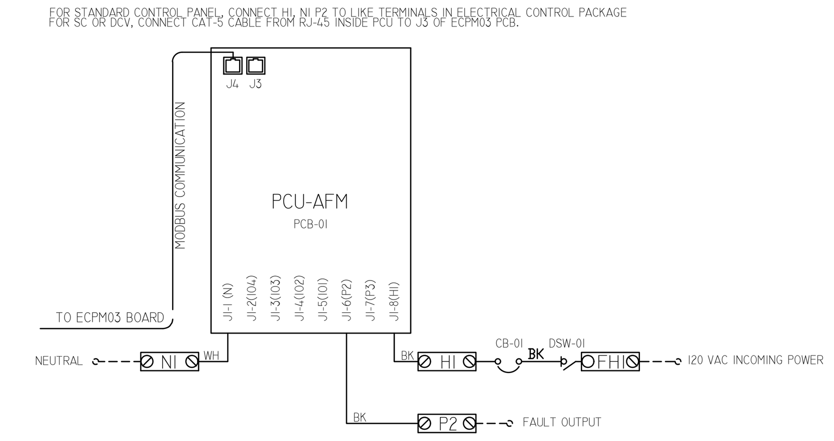

RA-x
24 VAC
RELAY

NO	4	3
NC	2	1
COIL	8	7
COM	6	5

COMPONENT IDENTIFICATION

Label	Description	Location
CB-01	Circuit Breaker	[6]
DSW-01	Disconnect Switch	[6]
PCB-01	PCUAFM - A0018883	[2]

NOTES
----- FIELD WIRING
——— INTERNAL WIRING
ØXXØ TERMINAL IN PANEL

Drawing Shown De-energized
Tamper switches made C to NO when door is closed (Typical)

WIRE COLOR
BK - BLACK YW - YELLOW
BL - BLUE GR - GREEN
BR - BROWN GY - GRAY
OR - ORANGE OR/BL - ORANGE/BLUE (STRIPE)
RD - RED
WH - WHITE BL/RD - BLUE/RED (STRIPE)
PR - PURPLE
PK - PINK RD/GN - RED/GREEN (STRIPE)

REVISIONS	
DESCRIPTION	DATE

econ·air
www.econair.com
NYC Special Accounts
315 Gregory Street, Rochester, NY, 14620 PHONE: (917) 671 - 6534 FAX: 9197475605 EMAIL: reg34@econair.com

Pittsburgh, PA (23') EA
Pittsburgh, PA, 15206

DATE: 9/30/2024
DWG.#: 7051588
DRAWN BY: MORABITO
SCALE: 3/4" = 1'-0"
MASTER DRAWING
SHEET NO. 4

FRANK D. MILETO A.I.A.
14 BEAVER BROOK DRIVE, LONG VALLEY, N.J. 07853
Tel:(908) 876-9400 Fax:(908) 876-9455
Email: fmileto@comcast.net

OYOSHI
5803 CENTRE AVE, SPACE 105
PITTSBURGH, PA 15206

REVISIONS

DATE: 10/11/2024
SCALE: AS DRAWING
DRAWN: DJ
JOB NO. C24-045

M-3d

ELECTRICAL PACKAGE – JOB#7051588

NO	TAG	PACKAGE #	LOCATION	SWITCHES		OPTION	FANS CONTROLLED				
				LOCATION	QUANTITY		TYPE	Φ	HP	VOLT	FLA
1		DCV-1111	UTILITY CABINET RIGHT	UTILITY CABINET RIGHT	1 LIGHT	SMART CONTROLS DCV	EXHAUST	3	15.000	208	38.2
				HOOD # 2	1 FAN		SUPPLY	3	5.000	208	15.8

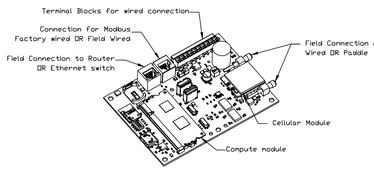

CASlink Monitor and Control

- Hood control panel to support communications to cloud-based Building Management System.
- Hood Control Panel to allow cloud-based Building Management System to monitor real time parameters outlined as MONITOR in the points list.
- Hood Control Panel to allow cloud-based Building Management System to control parameters outlined as CONTROL in the points list.
- Hood Control Panel to allow cloud-based Building Management System to implement SYSTEM ECONOMIZER control strategies for fully integrated Building Management.

MONITORING AND CONTROL POINTS LIST

DCV Packages	Function
Room Temperature	MONITOR
Duct Temperature(s)	MONITOR
MUA Discharge Temperature	MONITOR
Kitchen RTU Discharge Temperature	MONITOR
Fan Speed	MONITOR
Fan Amperage	MONITOR
Fan Power	MONITOR
VFD Faults	MONITOR
Controller Faults	MONITOR
Fan Faults	MONITOR
Fan Status	MONITOR
PCU Faults	MONITOR
PCU Filter Clog Percentages	MONITOR
Fire Condition	MONITOR
CORE Fire System	MONITOR
Building Pressures	MONITOR
Prep Time Button	MONITOR & CONTROL
Fans Button	MONITOR & CONTROL
Lights Button	MONITOR & CONTROL
Wash Button	MONITOR & CONTROL

SC Packages	Function
Room Temperature(s)	MONITOR
Duct Temperature(s)	MONITOR
MUA Discharge Temperature	MONITOR
Kitchen RTU Discharge Temperature	MONITOR
Controller Faults	MONITOR
Fan Faults	MONITOR
Fan Status	MONITOR
PCU Faults	MONITOR
PCU Filter Clog Percentages	MONITOR
Fire Condition	MONITOR
CORE Fire System	MONITOR
Building Pressures	MONITOR
Fans Button(s)	MONITOR & CONTROL
Lights Button(s)	MONITOR & CONTROL
Wash Button	MONITOR & CONTROL

JOB NO 7051588 | MODEL NUMBER DCV-1111 | JOB NAME Pittsburgh, PA (23') EA | DRAWN BY | DATE 9/30/2024 | SCHEMATIC TYPE INSTALL | DWG NO ECP #1-1

DESCRIPTION OF OPERATION:
Demand Control Ventilation, w/ control for 1 Exhaust Fan, 1 Supply Fan, Exhaust on in Fire, Lights out in Fire, Fans modulate based on duct temperature. INVERTER DUTY 3 PHASE MOTOR REQUIRED FOR USE WITH VFD. Room temperature sensor shipped loose for field installation.Verify distance between VFD and Motor; additional cost could apply if distance exceeds 50 feet.

BREAKER PANEL TO PRIMARY CONTROL PANEL
Responsibility: Electrician
BREAKER SIZE SHOWN IS THE MAXIMUM ALLOWED

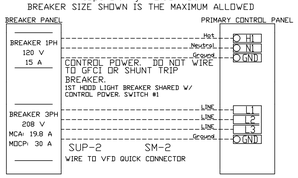

BREAKER PANEL TO UTILITY CABINET
Responsibility: Electrician
BREAKER SIZE SHOWN IS THE MAXIMUM ALLOWED

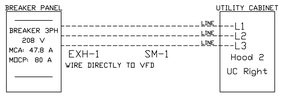

UTILITY CABINET TO FANS
Responsibility: Electrician

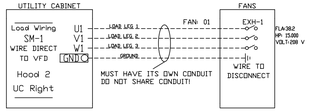

CONTROL PANEL TO FANS
Responsibility: Electrician

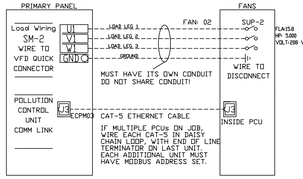

CONTROL PANEL TO ACCESSORY ITEMS
Responsibility: Electrician

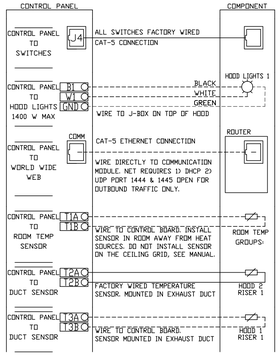

THE FOLLOWING CONNECTIONS MAY OR MAY NOT BE REQUIRED BASED ON JOBSITE SPECIFICATIONS

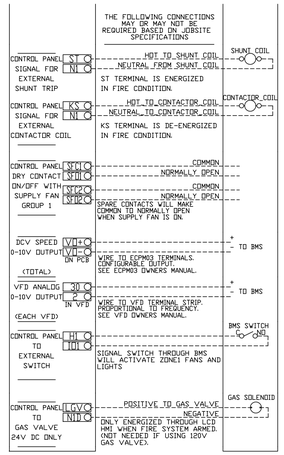

CONTROL PANEL TO FIRE SYSTEM
Responsibility: ALARM CONTRACTOR

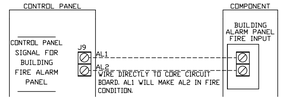

JOB NO 7051588 | MODEL NUMBER DCV-1111 | JOB NAME Pittsburgh, PA (23') EA | DRAWN BY | DATE 9/30/2024 | SCHEMATIC TYPE INSTALL | DWG NO ECP #1-2

DESCRIPTION OF OPERATION:
Demand Control Ventilation, w/ control for 1 Exhaust Fan, 1 Supply Fan, Exhaust on in Fire, Lights out in Fire, Fans modulate based on duct temperature. INVERTER DUTY 3 PHASE MOTOR REQUIRED FOR USE WITH VFD. Room temperature sensor shipped loose for field installation.Verify distance between VFD and Motor; additional cost could apply if distance exceeds 50 feet.

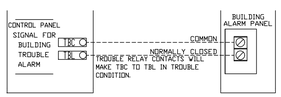

CONTROL PANEL TO FIRE SYSTEM
Responsibility: CERTIFIED INSTALLER

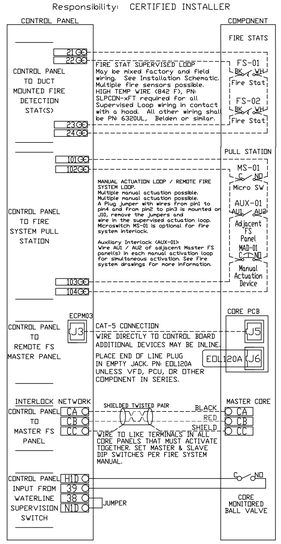

JOB NO 7051588 | MODEL NUMBER DCV-1111 | JOB NAME Pittsburgh, PA (23') EA | DRAWN BY | DATE 9/30/2024 | SCHEMATIC TYPE INSTALL | DWG NO ECP #1-3

DESCRIPTION OF OPERATION:
Demand Control Ventilation, w/ control for 1 Exhaust Fan, 1 Supply Fan, Exhaust on in Fire, Lights out in Fire, Fans modulate based on duct temperature. INVERTER DUTY 3 PHASE MOTOR REQUIRED FOR USE WITH VFD. Room temperature sensor shipped loose for field installation.Verify distance between VFD and Motor; additional cost could apply if distance exceeds 50 feet.

04/11/2017 Rev. 16

PCU CORE FIRE PROTECTION ELECTRICAL DETAIL

ELECTRICIAN:
1) WIRE MAIN CONTROL PANEL PER INCLUDED SCHEMATIC

PCU-1 FS: MASTER

ELECTRICAL CONTRACTOR REQUIREMENT					
ITEM	CONNECTION IN PANEL	CONNECTION ON DEVICE	VOLTAGE	AMPERAGE	COMMENTS
PCU CORE CONTROL PANEL POWER	H1, N1, GROUND	CIRCUIT BREAKER	120 VAC	15 AMPS	CONTROL PANEL POWER MUST NOT BE RUN THROUGH SHUNT TRIP BREAKER
REMOTE 120VAC ANSUL AUTOMAN (OPTIONAL)	AU1, AU2	ANSUL AUTOMAN MICROSWITCH	120 VAC	< 6 AMPS	120V TO AU1, AU2 TO ANSUL ELECTRIC AUTOMAN, ANSUL SOLENOID TO NEUTRAL

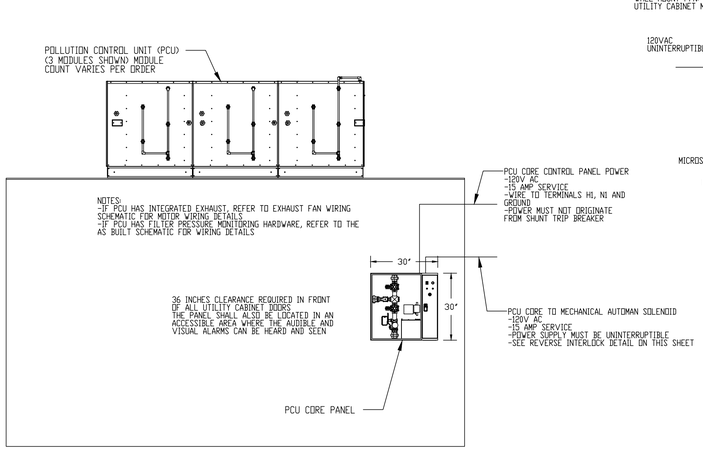

120VAC ELECTRICAL AUTOMAN REVERSE INTERLOCK DETAIL

HOOD OR WALL MOUNTED ELECTRIC REGULATED RELEASE
WALL MOUNT P/N 429856 (R-102), 423386 (PIRANHA)
UTILITY CABINET MOUNT P/N 41805 (R-102), 423386 (PIRANHA)

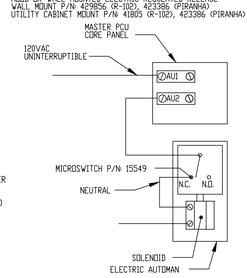

NOTE: SEE INSTALLATION, OPERATION, AND MAINTENANCE MANUAL FOR FURTHER INSTRUCTIONS

ATTENTION: LOW-VOLTAGE DC OR SIGNALING WIRE SHOULD BE ROUTED IN SEPARATE CONDUIT FROM ALL AC SOURCES.

ELECTRICAL CONTRACTOR

REVISIONS

DESCRIPTION	DATE:

econ·air
www.econair.com
NYC Special Accounts
315 Gregory Street, Rochester, NY, 14620 PHONE: (917) 671 - 6534 FAX: 9197475605 EMAIL: reg34@econair.com

FRANK D. MILETO A.I.A.
14 BEAVER BROOK DRIVE, LONG VALLEY, N.J. 07853
Tel:(908) 876-9400 Fax:(908) 876-9455
Email: fmileto@comcast.net

OYOSHI
5803 CENTRE AVE, SPACE 105
PITTSBURGH, PA 15206

Pittsburgh, PA (23') EA
Pittsburgh, PA, 15206

DATE: 9/30/2024
DWG.#: 7051588
DRAWN BY: MORABITO
SCALE: 3/4" = 1'-0"
MASTER DRAWING

SHEET NO. 5

REVISIONS

DATE: 10/11/2024
SCALE: AS DRAWING
DRAWN: DJ
JOB NO. C24-045

M-3e

JOB NO	MODEL NUMBER	DRAWN BY	SCHEMATIC TYPE	DESCRIPTION OF OPERATION:
7051588	DCV-1111		INSTALL	Demand Control Ventilation, w/ control for 1 Exhaust Fan, 1 Supply Fan, Exhaust on in Fire, Lights out in Fire, Fans modulate based on duct temperature. INVERTER DUTY 3 PHASE MOTOR REQUIRED FOR USE WITH VFD. Room temperature sensor shipped loose for field installation/verify distance between VFD and Motor; additional cost could apply if distance exceeds 50 feet.
	JOB NAME: Pittsburgh, PA (23') EA	DATE: 9/30/2024	DWG NO: ECP #1-4	

PCU CORE FIRE PROTECTION LOW-VOLTAGE WIRING DETAIL

10/01/2023 Rev.18

ALARM CONTRACTOR:
1) WIRE REMOTE FIRESTAT SENSOR(S), HOOD/PCU CORE INTERLOCK AND FIRE ALARM CONTACTS
2) COMPLETE FINAL HOOKUP OF SYSTEM
3) INSPECT ALL WIRING TO POLLUTION CONTROL UNIT
4) PERFORM FINAL FIRE SYSTEM TEST
5) FILL SURFACTANT TANK

PCU-1 FS: MASTER

ALARM CONTRACTOR REQUIREMENT

ITEM	CONNECTION IN PCU CORE PANEL	CONNECTION ON DEVICE	VOLTAGE	AMPERAGE	COMMENTS
FIRESTAT SENSOR(S)**	21 AND 24 22 AND 23	BLACK & WHITE	24 VDC	< 1.0 AMPS	WIRE FIRE SENSOR BLACK WIRES BETWEEN TERMINALS 22 AND 23 . WIRE FIRE SENSOR WHITE (OR RED) WIRE BETWEEN TERMINALS 21 AND 24. USE BELDEN# 6320UL OR SIMILAR WIRE
MANUAL ACTUATION DEVICE(S)	101 AND 104 102 AND 103	1 & 2	24 VDC	< 1.0 AMPS	WIRE MANUAL ACTUATION DEVICE TERMINAL 1 BETWEEN CORE PANEL TERMINALS 102 AND 103 WIRE MANUAL ACTUATION DEVICE TERMINAL 2 BETWEEN CORE PANEL TERMINALS 101 AND 104 JUMPER 101 TO 104 AND 102 TO 103 IF NO MANUAL ACTUATION DEVICE IS INSTALLED
CORE INTERLOCK	CA, CB, CC	CA, CB, CC	RS-485 COMMUNICATIONS SIGNAL		CORE SYSTEM (1) CA, TO CORE SYSTEM (2) CA. CORE SYSTEM (1) CB, TO CORE SYSTEM (2) CB. CORE SYSTEM (1) CC, TO CORE SYSTEM (2) CC. USE BELDEN# 88760 OR SIMILAR WIRE
FIRE ALARM CONTACT	AL1, AL2	VARIES	50V MAX (AC/DC)	<1.0 AMPS	WIRE TO AL1 & AL2 NORMALLY OPEN CONTACT, CLOSES IN FIRE CONDITION
TROUBLE CONTACT	TBC, TBL, TOK	VARIES	MAX 120 VAC	UP TO 6 AMPS	WIRE TO TBL & TBC NORMALLY OPEN CONTACT, CLOSES IN TROUBLE CONDITION
CORE TO HOOD COMMUNICATIONS CABLE	RJ-45 JACK	RJ-45 J3 (ECPM03 PANEL)	SIGNAL	<1.0 AMPS	RJ-45 CAT5 CABLE TO HOOD CONTROL PREWIRE. WIRE J5 OF CORE BOARD (PCU) TO J3 OF ECPM03 (HOOD PANEL). NOT REQUIRED FOR SLAVE PCU CORE PANELS.

**ALL EXTERIOR WIRING CONNECTIONS TO PCU MUST BE ROUTED IN LIQUID TIGHT CONDUIT.

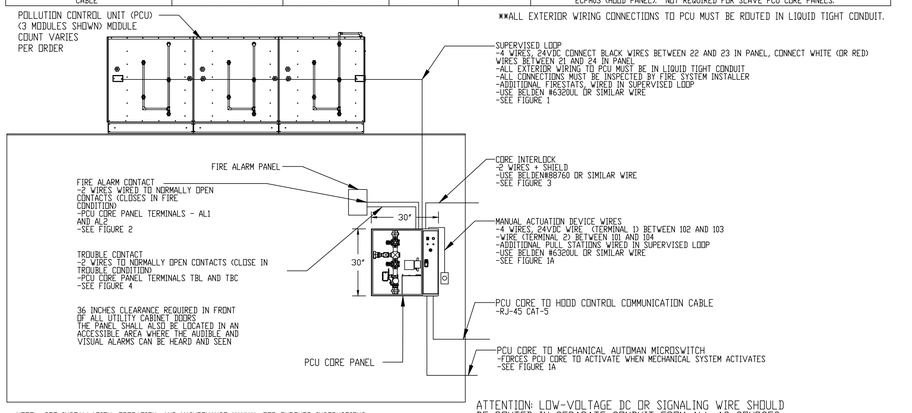

ATTENTION: LOW-VOLTAGE DC OR SIGNALING WIRE SHOULD BE ROUTED IN SEPARATE CONDUIT FROM ALL AC SOURCES

NOTE: SEE INSTALLATION, OPERATION, AND MAINTENANCE MANUAL FOR FURTHER INSTRUCTIONS

CORE CERTIFIED INSTALLER

JOB NO	MODEL NUMBER	DRAWN BY	SCHEMATIC TYPE	DESCRIPTION OF OPERATION:
7051588	DCV-1111		INSTALL	Demand Control Ventilation, w/ control for 1 Exhaust Fan, 1 Supply Fan, Exhaust on in Fire, Lights out in Fire, Fans modulate based on duct temperature. INVERTER DUTY 3 PHASE MOTOR REQUIRED FOR USE WITH VFD. Room temperature sensor shipped loose for field installation/verify distance between VFD and Motor; additional cost could apply if distance exceeds 50 feet.
	JOB NAME: Pittsburgh, PA (23') EA	DATE: 9/30/2024	DWG NO: ECP #1-5	

PCU CORE FIRE PROTECTION PLUMBING DETAIL

04/11/2017 Rev. 14

PLUMBER:
1) CONNECT PCU CORE PANEL DRAIN
2) CONNECT PCU DRAIN
3) WHEN THE PCU IS INSTALLED ABOVE OR NEAR A FINISHED SPACE, THE INSTALLING CONTRACTOR MUST PROTECT THE FINISHED SPACE TO PREVENT WATER DAMAGE IN THE EVENT OF A FIRE SYSTEM DISCHARGE OR WHEN REGULAR CLEANING IS PERFORMED ON THE UNIT.

PCU-1 FS: MASTER

PLUMBING CONTRACTOR REQUIREMENT

ITEM	CONNECTION	MATERIAL	PRESSURE	FLOW RATE	COMMENTS
PCU CORE PANEL DRAIN	1 1/2" NPT	STAINLESS STEEL, COPPER, STEEL PIPE ONLY	SPRINKLER SYSTEM PRESSURE	CAPACITY OF THE SPRINKLER SYSTEM	CONNECT TO BUILDING DRAIN CAPABLE OF HANDLING WATER VOLUME. LINE MUST BE SLOPED AWAY FROM PANEL 1/4" PER FOOT.
PCU DRAIN	3" NPT	STAINLESS STEEL, COPPER, STEEL PIPE ONLY	N/A	CAPACITY OF THE SPRINKLER SYSTEM	CONNECT TO BUILDING GREASE INTERCEPTOR. LINE MUST BE SLOPED AWAY FROM POLLUTION CONTROL UNIT 1/4" PER FOOT.

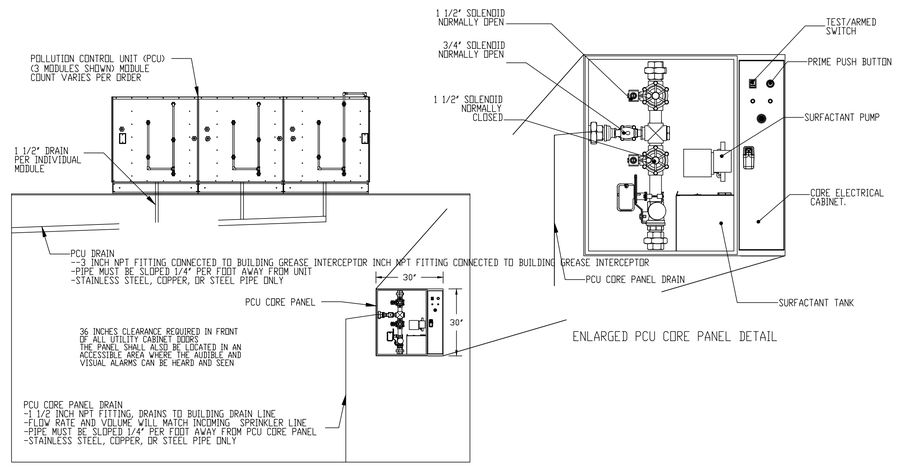

NOTE: SEE INSTALLATION, OPERATION, AND MAINTENANCE MANUAL FOR FURTHER INSTRUCTIONS

PLUMBING CONTRACTOR

JOB NO	MODEL NUMBER	DRAWN BY	SCHEMATIC TYPE	DESCRIPTION OF OPERATION:
7051588	DCV-1111		INSTALL	Demand Control Ventilation, w/ control for 1 Exhaust Fan, 1 Supply Fan, Exhaust on in Fire, Lights out in Fire, Fans modulate based on duct temperature. INVERTER DUTY 3 PHASE MOTOR REQUIRED FOR USE WITH VFD. Room temperature sensor shipped loose for field installation/verify distance between VFD and Motor; additional cost could apply if distance exceeds 50 feet.
	JOB NAME: Pittsburgh, PA (23') EA	DATE: 9/30/2024	DWG NO: ECP #1-6	

PCU CORE FIRE PROTECTION SPRINKLER DETAIL

10/01/2023 Rev. 16

BUILDING SPRINKLER CONTRACTOR:
1) CONNECT CORE WATER LINE TO BUILDING WET SPRINKLER SYSTEM. STAINLESS STEEL, COPPER, STEEL PIPE ONLY
2) CONNECT PCU CORE PANEL TO PCU SPRAY BARS. STAINLESS STEEL, COPPER, STEEL PIPE ONLY

PCU-1 FS: MASTER

SPRINKLER CONTRACTOR REQUIREMENT

ITEM	CONNECTION	OPERATING PRESSURE	K-FACTOR	FLOW RATE BASED OFF MINIMUM PSI ALLOWED	COMMENTS
PCU CORE PANEL WATER SUPPLY LINE	1 1/2" NPT	30 PSI	9.1	34 GPM	WATER LINE MUST BE SUPERVISED AND HAVE NO MANUAL UNSUPERVISED SHUT-OFF VALVES, STRAINER REQUIRED UPSTREAM OF PANEL
CORE WATER SUPPLY LINE TO PCU	1 1/2" NPT	20 PSI MINIMUM AT PCU INLET	9.1	34 GPM	WATER LINE MUST BE SLOPED BACK 1/4" PER FOOT TO PCU CORE PANEL TO PREVENT STANDING WATER FROM FREEZING. LINE MUST BE ADAPTED TO 3/8" AT INLET OF EACH MODULE.

FIRE SYSTEM DISCHARGE COEFFICIENT (K-FACTOR)

PCU SIZE		# OF MODULES 1	2	3	4	5
PCU	1	2.2	3.6	5.1	6.5	8.0
PCU	2	2.9	4.4	5.8	7.3	8.7
PCU	3	3.3	5.1	6.9	8.7	10.5
PCU	4	3.6	5.8	8.0	10.2	12.3
PCU	5	4.0	6.5	9.1	11.6	14.2
PCU	6	4.7	7.3	9.8	12.3	14.9
PCU	7	6.2	10.2	14.2	18.2	22.1

FIRE SYSTEM WATER CONSUMPTION BASED ON PCU SIZE IN GPM (F)

PCU SIZE		# OF MODULES 1	2	3	4	5
PCU	1	8.1	14	19	24	30
PCU	2	11	16	22	27	33
PCU	3	12	19	26	33	39
PCU	4	14	22	30	38	46
PCU	5	15	24	34	43	53
PCU	6	18	27	37	46	56
PCU	7	23	38	53	68	83

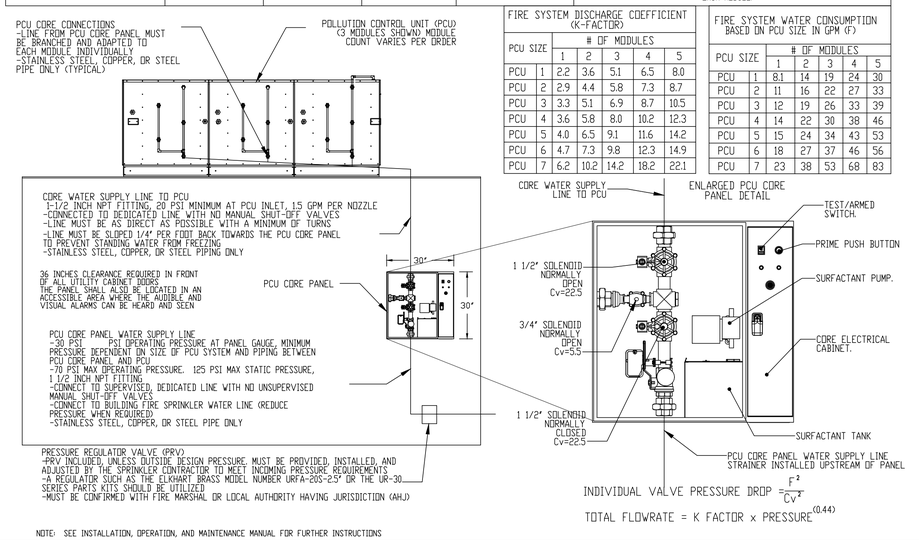

INDIVIDUAL VALVE PRESSURE DROP $= \frac{F^2}{Cv^2}$

TOTAL FLOWRATE = K FACTOR x $\text{PRESSURE}^{(0.44)}$

NOTE: SEE INSTALLATION, OPERATION, AND MAINTENANCE MANUAL FOR FURTHER INSTRUCTIONS

SPRINKLER CONTRACTOR

JOB NO	MODEL NUMBER	DRAWN BY	SCHEMATIC TYPE	DESCRIPTION OF OPERATION:
7051588	DCV-1111		INSTALL	Demand Control Ventilation, w/ control for 1 Exhaust Fan, 1 Supply Fan, Exhaust on in Fire, Lights out in Fire, Fans modulate based on duct temperature. INVERTER DUTY 3 PHASE MOTOR REQUIRED FOR USE WITH VFD. Room temperature sensor shipped loose for field installation/verify distance between VFD and Motor; additional cost could apply if distance exceeds 50 feet.
	JOB NAME: Pittsburgh, PA (23') EA	DATE: 9/30/2024	DWG NO: ECP #1-7	

PCU CORE FIRE PROTECTION LOW-VOLTAGE FIGURES

10/01/2023 Rev. 17

PCU-1 FS: MASTER

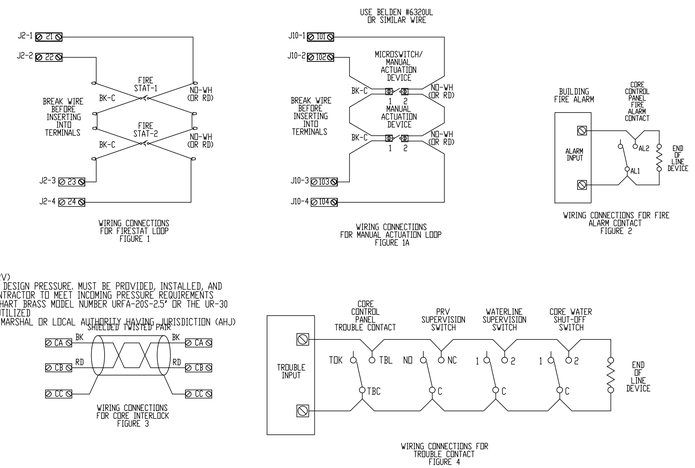

ATTENTION: LOW-VOLTAGE DC OR SIGNALING WIRE SHOULD BE ROUTED IN SEPARATE CONDUIT FROM ALL AC SOURCES

NOTE: SEE INSTALLATION, OPERATION, AND MAINTENANCE MANUAL FOR FURTHER INSTRUCTIONS

REVISIONS

DESCRIPTION	DATE:

econ·air
www.econair.com
NYC Special Accounts
315 Gregory Street, Rochester, NY, 14620 PHONE: (917) 671 - 6534 FAX: 9197475605 EMAIL: reg34@econair.com

FRANK D. MILETO A.I.A.
14 BEAVER BROOK DRIVE, LONG VALLEY, N.J. 07853
Tel:(908) 876-8400 Fax:(908) 876-9455
Email: fmileto@comcast.net

OYOSHI
5803 CENTRE AVE, SPACE 105
PITTSBURGH, PA 15206

Pittsburgh, PA (23') EA
Pittsburgh, PA, 15206

DATE: 9/30/2024

DWG.#: 7051588

DRAWN BY: MORABITO

SCALE: 3/4" = 1'-0"

MASTER DRAWING

SHEET NO. 6

REVISIONS

DATE: 10/11/2024
SCALE: AS DRAWING
DRAWN: DJ
JOB NO. C24-045

M-3f

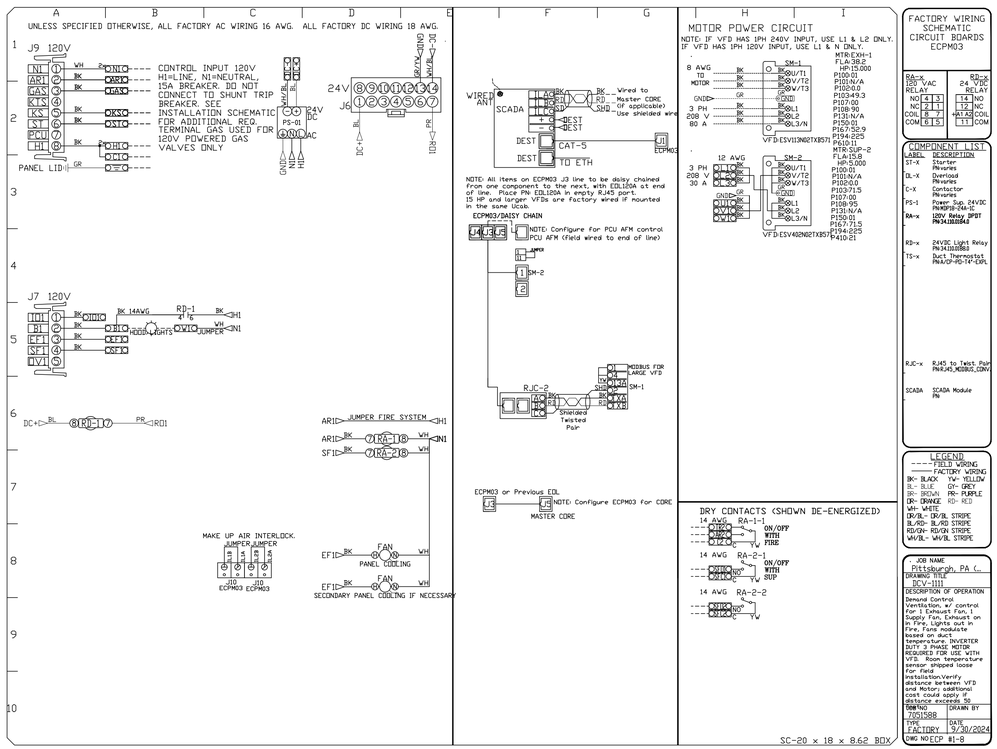

FACTORY WIRING SCHEMATIC CIRCUIT BOARDS ECPM03

RA-x 120 VAC RELAY		RD-x 24 VDC RELAY	
NO	4	3	14 NO
NC	2	1	12 NC
COIL	8	7	+ATA2 COIL
COM	6	5	11 COM

COMPONENT LIST

LABEL	DESCRIPTION
ST-X	Starter PMvaries
OL-X	Overload PMvaries
C-X	Contactor PMvaries
PS-1	Power Sup. 24VDC PM50P36-24A-1C
RA-x	120V Relay DPDT PM24U2DD24A
RD-x	24VDC Light Relay PM34U2DD24
TS-x	Duct Thermostat PMA/CF-PG-T4F-EXPL
RJC-x	RJ45 to Twist Pair PM8J45_MODBUS_CONV
SCADA	SCADA Module PM

LEGEND
FIELD WIRING
FACTORY WIRING
BK- BLACK YW- YELLOW
BL- BLUE GY- GREY
BR- BROWN PR- PURPLE
OR- ORANGE RD- RED
WH- WHITE
OR/BL- OR/BL STRIPE
BL/RD- BL/RD STRIPE
RD/GN- RD/GN STRIPE
WH/BL- WH/BL STRIPE

JOB NAME Pittsburgh, PA (...
DRAWING TITLE DCV-1111
DESCRIPTION OF OPERATION
Demand Control Ventilation, w/ control for 1 Exhaust Fan, 1 Supply Fan. Exhaust on in Fire, Lights out in Fire, Fans modulate based on duct. Installation: INVERTER DUTY 3 PHASE MOTOR REQUIRED FOR USE WITH VFD. Room temperature sensor shipped loose for field. Installation: Verify distance between VFD and Motor; additional cost could apply if distance exceeds 50
DWG NO 7051588 DRAWN BY
TYPE FACTORY DATE 9/30/2024
DWG NO ECP #1-8

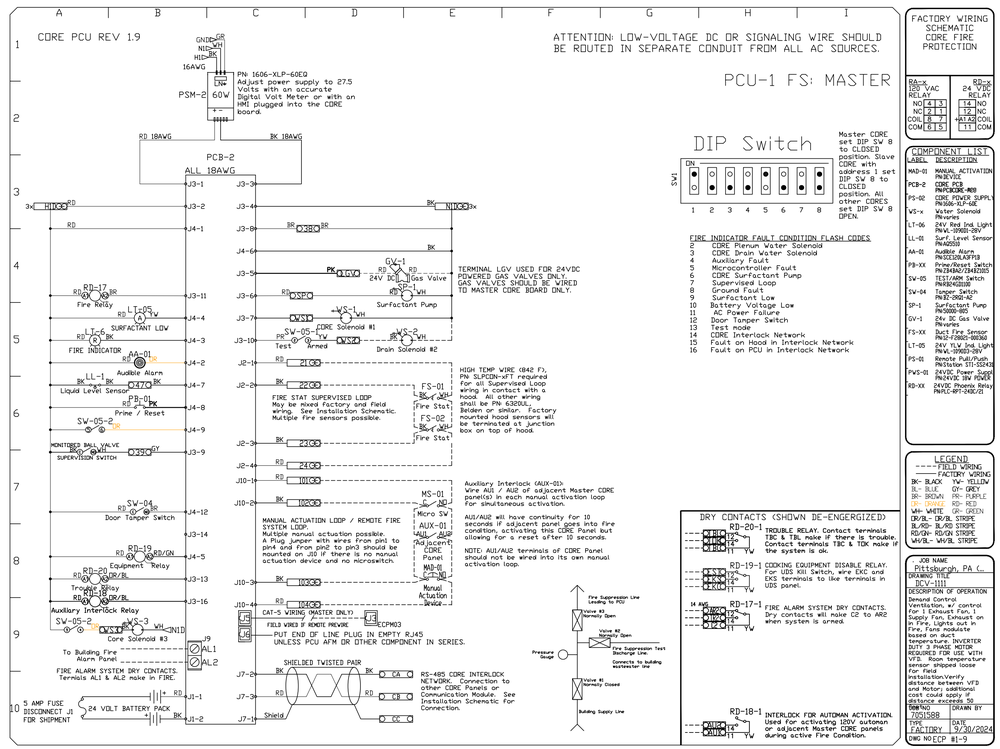

FACTORY WIRING SCHEMATIC CORE FIRE PROTECTION

RA-x 120 VAC RELAY		RD-x 24 VDC RELAY	
NO	4	3	14 NO
NC	2	1	12 NC
COIL	8	7	+ATA2 COIL
COM	6	5	11 COM

COMPONENT LIST

LABEL	DESCRIPTION
MAD-01	MANUAL ACTIVATION PN:3EVXCE
PCB-2	CORE PCB PNPCBCORE-R03
PS-02	CORE POWER SUPPLY PN:1606-XLP-60E
VS-x	Water Solenoid PMvaries
LT-06	24V Red Ind Light PNVL-3R6BB-28V
LL-01	Surf Level Sensor PNA0233
AA-01	Audible Alarm PNSC0218LAA719
PB-XX	Momentary Switch PN:2AA2G/2AA2GB5
SV-05	TEST/ARM Switch PNA0422GB
SV-04	Tamper Switch PNB2-062-02
SP-1	Surfactant Pump PN5000-805
GV-1	24v DC Gas Valve PMvaries
FS-XX	Duct Fire Sensor PN12-F2B02-B0300
LT-05	24V YLW Ind Light PNVL-3Y6BB-28V
PS-01	Remote Pull/Push PN:Solon ST-152436
PWS-01	24VDC Power Supply PN:XV2L 3W POWER
RD-XX	24VDC Phoenix Relay PN:RC-8PT-24DC/21

LEGEND
FIELD WIRING
FACTORY WIRING
BK- BLACK YW- YELLOW
BL- BLUE GY- GREY
BR- BROWN PR- PURPLE
OR- ORANGE RD- RED
WH- WHITE GR- GREEN
OR/BL- OR/BL STRIPE
BL/RD- BL/RD STRIPE
RD/GN- RD/GN STRIPE
WH/BL- WH/BL STRIPE

DRY CONTACTS (SHOWN DE-ENGERGIZED)
RD-20-1 TROUBLE RELAY. Contact terminals TB0 & TB1, make if there is trouble. Contact terminals TB0 & TB2 make if the system is ok.
RD-19-1 COOKING EQUIPMENT DISABLE RELAY. For UL9 Kill Switch, wire EKC and EKS terminals to like terminals in UDS panel.
RD-17-1 FIRE ALARM SYSTEM DRY CONTACTS. Dry contacts will make C2 to AR2 when system is armed.
RD-18-1 INTERLOCK FOR AUTOMAN ACTIVATION. Used for activating 120V automan or adjacent Master CORE panels during active Fire Condition.

JOB NAME Pittsburgh, PA (...
DRAWING TITLE DCV-1111
DESCRIPTION OF OPERATION
Demand Control Ventilation, w/ control for 1 Exhaust Fan, 1 Supply Fan. Exhaust on in Fire, Lights out in Fire, Fans modulate based on duct. Installation: INVERTER DUTY 3 PHASE MOTOR REQUIRED FOR USE WITH VFD. Room temperature sensor shipped loose for field. Installation: Verify distance between VFD and Motor; additional cost could apply if distance exceeds 50
DWG NO 7051588 DRAWN BY
TYPE FACTORY DATE 9/30/2024
DWG NO ECP #1-9

REVISIONS

DESCRIPTION	DATE:

econ·air
www.econair.com
NYC Special Accounts
315 Gregory Street, Rochester, NY, 14620 PHONE: (917) 671 - 6534 FAX: 9197475605 EMAIL: reg34@econair.com
FRANK D. MILETO A.I.A.
14 BEAVER BROOK DRIVE, LONG VALLEY, N.J. 07853
Tel:(908) 876-8400 Fax:(908) 876-9455
Email: fmileto@comcast.net

Pittsburgh, PA (23') EA
Pittsburgh, PA, 15206

DATE: 9/30/2024
DWG.#: 7051588
DRAWN BY: MORABITO
SCALE: 3/4" = 1'-0"
MASTER DRAWING
SHEET NO. 7

OYOSHI
5803 CENTRE AVE, SPACE 105
PITTSBURGH, PA 15206

REVISIONS

DATE: 10/11/2024
SCALE: AS DRAWING
DRAWN: DJ
JOB NO. C24-045

M-3g

DEMAND CONTROL VENTILATION HOOD CONTROL PANEL SPECIFICATIONS:

- CONTROLS SHALL BE LISTED BY ETL (UL 508A) AND SHALL COMPLY WITH DEMAND VENTILATION SYSTEM TURNDOWN REQUIREMENTS OUTLINED IN IECC 403.7.5 (2021).
- THE CONTROL ENCLOSURE SHALL BE NEMA 1 RATED AND LISTED FOR INSTALLATION INSIDE OF THE EXHAUST HOOD UTILITY CABINET. THE CONTROL ENCLOSURE MAY BE CONSTRUCTED OF STAINLESS STEEL OR PAINTED STEEL.
- TEMPERATURE PROBE(S) LOCATED IN THE EXHAUST DUCT RISER(S) SHALL BE CONSTRUCTED OF STAINLESS STEEL.
- A DIGITAL CONTROLLER SHALL BE PROVIDED TO ACTIVATE THE HOOD EXHAUST FANS DYNAMICALLY BASED ON A FIXED DIFFERENTIAL BETWEEN THE AMBIENT AND DUCT TEMPERATURES SENSORS. THIS FUNCTION SHALL MEET THE REQUIREMENTS OF IMC 507.1.1.
- A DIGITAL CONTROLLER SHALL PROVIDE ADJUSTABLE HYSTERESIS SETTINGS TO PREVENT CYCLING OF THE FANS AFTER THE COOKING APPLIANCES HAVE BEEN TURNED OFF AND/OR THE HEAT IN THE EXHAUST SYSTEM IS REDUCED.
- A DIGITAL CONTROLLER SHALL PROVIDE AN ADJUSTABLE MINIMUM FAN RUN-TIME SETTING TO PREVENT FAN CYCLING.
- VARIABLE FREQUENCY DRIVES (VFDS) SHALL BE PROVIDED FOR FANS AS REQUIRED. THE DIGITAL CONTROLLER SHALL MODULATE THE VFDS BETWEEN A MINIMUM SETPOINT AND A MAXIMUM SETPOINT ON DEMAND. THE DUCT TEMPERATURE SENSOR INPUT(S) TO THE DIGITAL CONTROLLER SHALL BE USED TO CALCULATE THE SPEED REFERENCE SIGNAL.
- THE VFD SPEED RANGE OF OPERATION SHALL BE FROM 0% TO 100% FOR THE SYSTEM, WITH THE ACTUAL MINIMUM SPEED SET AS REQUIRED TO MEET MINIMUM VENTILATION REQUIREMENTS.
- AN INTERNAL ALGORITHM TO THE DIGITAL CONTROLLER SHALL MODULATE SUPPLY FAN VFD SPEED PROPORTIONAL TO ALL EXHAUST FANS THAT ARE LOCATED IN THE SAME FAN GROUP AS THE SUPPLY FAN.
- THE SYSTEM SHALL OPERATE IN PREP MODE DURING LIGHT COOKING LOAD OR COOL DOWN MODE WHEN SUFFICIENT HEAT REMAINS UNDERNEATH THE HOOD SYSTEM AFTER COOKING OPERATIONS HAVE COMPLETED. OPERATION DURING EITHER OF THESE PERIODS WILL DISABLE THE SUPPLY FANS AND PROVIDE AN EXHAUST FAN SPEED THAT IS EQUAL TO THE MINIMUM VENTILATION REQUIREMENT.
- A DIGITAL CONTROLLER SHALL DISABLE THE SUPPLY FAN(S), ACTIVATE THE EXHAUST FAN(S), ACTIVATE THE APPLIANCE SHUNT TRIP, AND DISABLE AN ELECTRIC GAS VALVE AUTOMATICALLY WHEN FIRE CONDITION IS DETECTED ON A COVERED HOOD.
- A DIGITAL CONTROLLER SHALL ALLOW FOR EXTERNAL BMS FAN CONTROL VIA DRY CONTACT (EXTERNAL CONTROL SHALL NOT OVERRIDE FAN OPERATION LOGIC AS REQUIRED BY CODE).
- AN LCD INTERFACE SHALL BE PROVIDED WITH THE FOLLOWING FEATURES:
  - A. ON/OFF PUSH BUTTON FAN & LIGHT SWITCH ACTIVATION.
  - B. INTEGRATED GAS VALVE RESET FOR ELECTRONIC GAS VALVES (NO RESET RELAY REQUIRED).
  - C. VFD FAULT DISPLAY WITH AUDIBLE & VISUAL ALARM NOTIFICATION.
  - D. DUCT TEMPERATURE SENSOR FAILURE DETECTION WITH AUDIBLE & VISUAL ALARM NOTIFICATION.
  - E. MIS-WIRED DUCT TEMPERATURE SENSOR DETECTION WITH AUDIBLE & VISUAL ALARM NOTIFICATION.
  - F. A SINGLE LOW VOLTAGE CAT-5 RJ45 WIRING CONNECTION.
  - G. AN ENERGY SAVINGS INDICATOR THAT UTILIZES MEASURED KWH FROM THE VFDS.

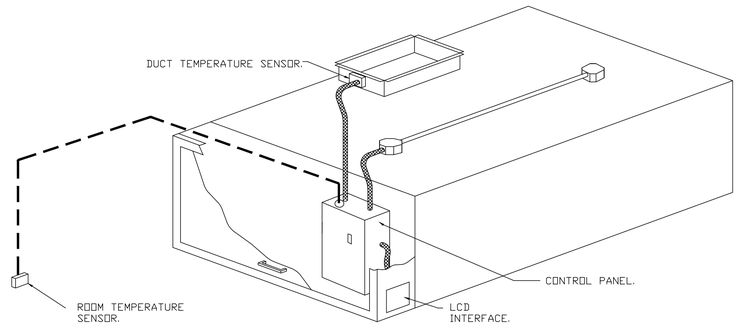

TYPICAL HOOD CONTROL PANEL INSTALLATION

SEQUENCE OF OPERATIONS:

THE HOOD CONTROL PANEL IS CAPABLE OF OPERATING IN ONE OR MORE OF THE FOLLOWING STATES AT ANY GIVEN TIME:

- AUTOMATIC: THE SYSTEM OPERATES BASED ON THE DIFFERENTIAL BETWEEN ROOM TEMPERATURE AND THE TEMPERATURE AT THE HOOD CAVITY OR EXHAUST DUCT COLLAR. FANS ACTIVATE AT A CONFIGURABLE TEMPERATURE DIFFERENTIAL THRESHOLD. DEPENDING ON THE JOB CONFIGURATION EACH FAN ZONE CAN BE CONFIGURED AS STATIC OR DYNAMIC. THESE TERMS REFER TO WHETHER A VARIABLE MOTOR (SUCH AS EC MOTORS OR VFD DRIVEN MOTORS) MODULATE WITH TEMPERATURE. IF THE PANEL IS EQUIPPED WITH VARIABLE SPEED FANS AND THE ZONE IS DEFINED AS "DYNAMIC", THESE WILL MODULATE WITHIN A USER-DEFINED RANGE BASED ON THE TEMPERATURE DIFFERENTIAL. PANELS EQUIPPED WITH VARIABLE SPEED FANS AND A FAN ZONE DEFINED AS "STATIC", FANS WILL RUN AT A SET SPEED CALCULATED FOR THE DRIVE. DEMAND CONTROL VENTILATION SYSTEMS ARE CAPABLE OF MODULATING EXHAUST AND MAKE UP AIR FAN SPEEDS PER THE REQUIREMENTS OUTLINED IN IECC 403.7.5 (2021).
- MANUAL: THE SYSTEM OPERATES BASED ON HUMAN INPUT FROM AN HMI.
- SCHEDULE: A WEEKLY SCHEDULE CAN BE SET TO RUN FANS FOR A SPECIFIED PERIOD THROUGHOUT THE DAY. THERE ARE THREE OCCUPIED TIMES PER DAY TO ALLOW FOR THE USER TO SET UP A TIME THAT IS SUITABLE TO THEIR NEEDS. ANY TIME THAT IS WITHIN THE DEFINED OCCUPIED TIME, THE SYSTEM WILL RUN AT MODULATION MODE AND FOLLOW THE FAN PROCEDURE ALGORITHM BASED ON TEMPERATURE DURING THIS TIME. DURING UNOCCUPIED TIME, THE SYSTEM WILL HAVE AN EXTRA OFFSET TO PREVENT UNINTENDED ACTIVATION OF THE SYSTEM DURING A TIME WHERE THE SYSTEM IS NOT BEING OCCUPIED.
- OTHER: THE SYSTEM OPERATES BASED ON THE INPUT FROM AN EXTERNAL SOURCE (DDC, BMS OR HARD-WIRED INTERLOCK).
- FIRE: UPON ACTIVATION OF THE HOOD FIRE SUPPRESSION SYSTEM, THE EXHAUST FAN WILL COME ON OR CONTINUE TO TO RUN, THE HOOD MAKEUP AIR WILL SHUTDOWN, AND A SIGNAL WILL BE SENT FOR ACTIVATING THE SHUNT TRIP BREAKER PROVIDED BY THE ELECTRICIAN. FUEL GAS WILL SHUT OFF VIA A MECHANICAL/ELECTRICAL GAS VALVE ACTUATED BY THE HOOD FIRE SUPPRESSION SYSTEM.

SYSTEM DESIGN VERIFICATION (SDV)

IF ORDERED, CAS SERVICE WILL PERFORM A SYSTEM DESIGN VERIFICATION (SDV) ONCE ALL EQUIPMENT HAS HAD A COMPLETE START UP PER THE OPERATION AND INSTALLATION MANUAL. TYPICALLY, THE SDV WILL BE PERFORMED AFTER ALL INSPECTIONS ARE COMPLETE.

ANY FIELD RELATED DISCREPANCIES THAT ARE DISCOVERED DURING THE SDV WILL BE BROUGHT TO THE
ATTENTION OF THE GENERAL CONTRACTOR AND CORRESPONDING TRADES ON SITE. THESE ISSUES WILL BE DOCUMENTED AND FORWARDED TO THE APPROPRIATE SALES OFFICE. IF CAS SERVICE HAS TO
RESOLVE A DISCREPANCY THAT IS A FIELD ISSUE, THE GENERAL CONTRACTOR WILL BE NOTIFIED AND BILLED FOR THE WORK. SHOULD A RETURN TRIP BE REQUIRED DUE TO ANY FIELD RELATED DISCREPANCY THAT CANNOT BE RESOLVED DURING THE SDV, THERE WILL BE ADDITIONAL TRIP CHARGES.

DURING THE SDV, CAS SERVICE WILL ADDRESS ANY DISCREPANCY THAT IS THE FAULT OF THE MANUFACTURER. SHOULD A RETURN TRIP BE REQUIRED, THE GENERAL CONTRACTOR AND APPROPRIATE SALES OFFICE WILL BE NOTIFIED. THERE WILL BE NO ADDITIONAL CHARGES FOR MANUFACTURER DISCREPANCIES.

REVISIONS

DESCRIPTION	DATE:

econ·air
www.econair.com
NYC Special Accounts
315 Gregory Street, Rochester, NY, 14620 PHONE: (917) 671 - 6534 FAX: 9197475605 EMAIL: reg34@econair.com

Pittsburgh, PA (23') EA
Pittsburgh, PA, 15206

DATE: 9/30/2024
DWG.#: 7051588
DRAWN BY: MORABITO
SCALE: 3/4" = 1'-0"
MASTER DRAWING
SHEET NO. 8

REGISTERED ARCHITECT FRANK D. MILETO COMMONWEALTH OF PENNSYLVANIA
FRANK D. MILETO A.I.A.
14 BEAVER BROOK DRIVE, LONG VALLEY, N.J. 07853
Tel:(908) 876-9400 Fax:(908) 876-9455
Email: fmileto@comcast.net

OYOSHI
5803 CENTRE AVE, SPACE 105
PITTSBURGH, PA 15206

REVISIONS

DATE: 10/11/2024
SCALE: AS DRAWING
DRAWN: DJ
JOB NO. C24-045

M-3h

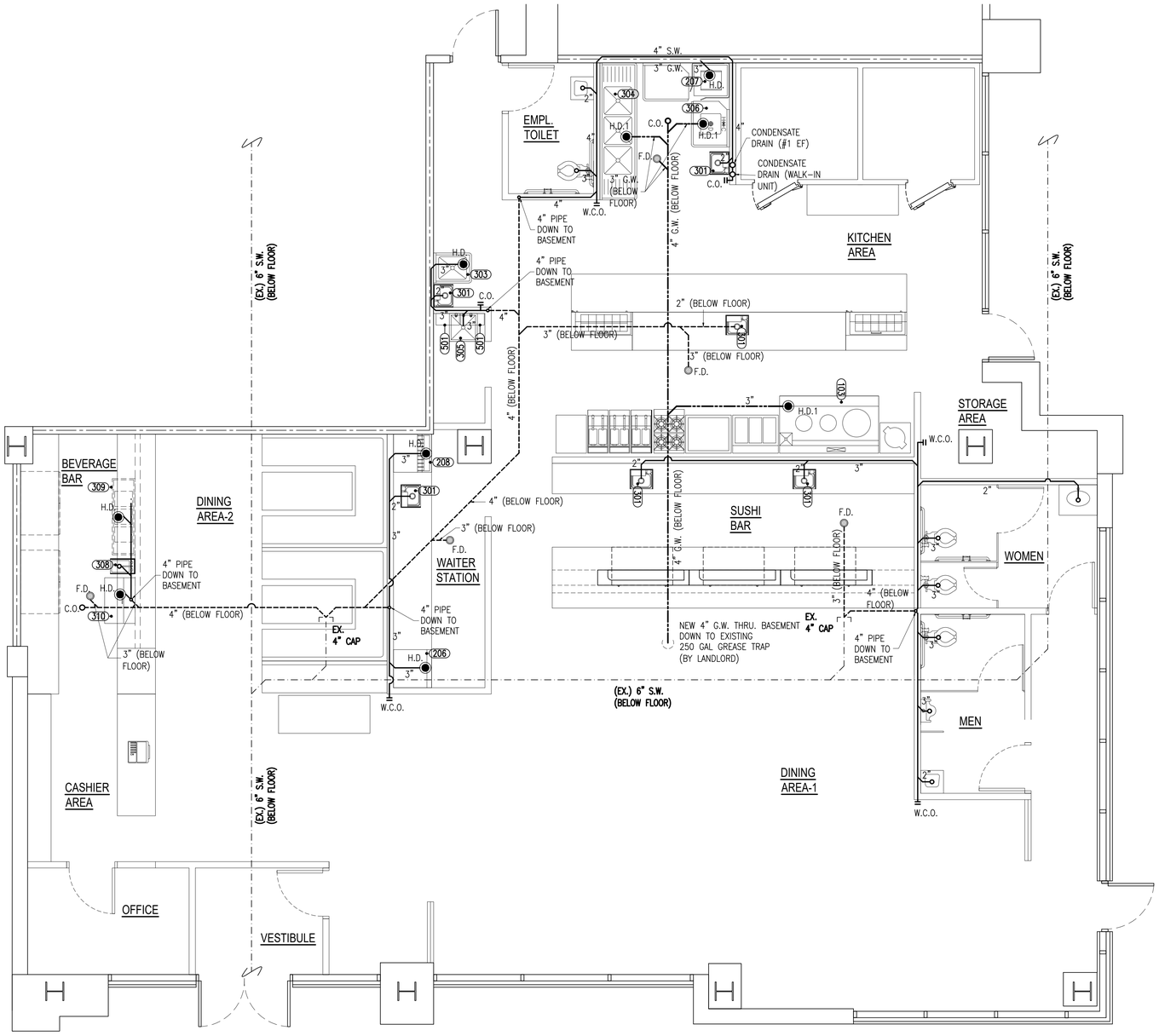

PLUMBING FLOOR PLAN SCALE: 1/4"=1'-0"

LEGEND

SW	SANITARY WASTE LINE (ABOVE FLOOR)	GAS	GAS LINE
SW	SANITARY WASTE LINE (BELOW FLOOR)	H.D.	HUB DRAIN INDIRECT WASTE
GW	NEW GREASE WASTE LINE	C.O.	FLOOR CLEAN OUT
SW	EXISTING SANITARY WASTE LINE	C.O.	WALL CLEAN OUT
VENT	VENT LINE	F.D.	FLOOR DRAIN
CW	COLD WATER LINE		CONNECT TO EXISTING
140°HW	HOT WATER LINE 140°		

PLUMBING REQUIREMENTS

1. ALL PLUMBING SHALL COMPLY WITH THE LOCAL PLUMBING & HEALTH DEPARTMENT.
2. INSULATE ALL HOT & COLD WATER LINES ABOVE GRADE WITH 3/4" FIBERGLASS PIPE INSULATION WITH VAPOR BARRIER.
3. VERIFY ALL FINAL CONNECTION TO KITCHEN EQUIPMENT WITH KITCHEN SUPPLIER VERIFY ROUGH-IN REQUIREMENTS WITH SAME.
4. MATERIALS SHALL BE AS FOLLOWS:
   A. WATER PIPING TO BE TYPE 'K' COPPER BELOW GRADE. TYPE 'L' COPPER ABOVE GRADE.
   B. WASTE PIPING TO BE CAST IRON.
   C. VENTS TO BE CAST IRON, GALVANIZED STEEL.
   D. GAS PIPING TO BE SCHEDULE 40, BLACK STEEL PIPE. PROVIDE AUTOMATIC GAS SHUT-OFF VALVE IN COOKING EQUIPMENT SUPPLY MAIN AS REQUIRED FOR COOKING EQUIPMENT FIRE PROTECTION SYSTEM. VERIFY & COORDINATE WITH KITCHEN EQUIPMENT SUPPLIER.
5. ALL INDIRECT WASTES EXCEEDING 24" IN LENGTH SHALL BE TRAPPED.
6. PROVIDE CLEANOUTS REQUIRED, AND AT THE BASE OF ALL STACKS.
7. ALL MATERIALS USED WITHIN RETURN AIR PLENUMS SHALL BE APPROVED FOR SUCH USE.
8. PROVIDE FIXTURE STOPS AT ALL PLUMBING FIXTURES.
9. PROVIDE ALL FITTING & ACCESSORIES AS REQUIRED FOR A COMPLETE INSTALLATION.
10. HOT WATER SUPPLIED TO LAVATORY FIXTURES SHALL NOT EXCEED 110 F.
11. HANDICAP PLUMBING FIXTURES SHALL BE INSTALLED IN ACCORDANCE WITH THE ADA REQUIREMENT & LOCAL STATE BARRIER FREE REQUIREMENTS.
12. COORDINATE ALL WORK IN FIELD WITH ARCHITECTURAL, MECHANICAL & ELECTRICAL TRADES.
13. VERIFY ALL EXISTING JOB CONDITIONS & AS REQUIRED FOR A COMPLETE INSTALLATION.

KITCHEN EQUIPMENT SCHEDULE

NO.	QTY.	DESCRIPTION	MANUFACTURE	MODEL	N.S.F. U.L.	WATER C.W.	WATER H.W.	WASTE DIR.	WASTE IND.
103	1	CHINESE RANGE STOVE	WIN SUPPLY	WR-300	N.S.F.	1/2"			3"
206	1	ICE MAKER	HOSHIZAKI	KM-901MAJ	N.S.F.	1/2"			3"
207	1	DISHWASHER	CMA	EST-AH	N.S.F.		3/4"		3"
208	1	SODA DISP.	LANCER	IDB 30	N.S.F.	1/2"			3"
301	6	HAND SINK	EAGLE GROUP	HSA-10-F-LRS	N.S.F.	1/2"	1/2"	2"	
303	1	1 COMP. SINK	EAGLE GROUP	414-18-1	N.S.F.	3/4"	3/4"		3"
304	1	3 COMP. SINK	EAGLE GROUP	414-22-3-18	N.S.F.	3/4"	3/4"		3"
305	1	MOP SINK	EAGLE GROUP	F1916	N.S.F.	1/2"	1/2"	3"	
306	1	SOILED DISHTABLE W/ SPRAY SINK	EAGLE GROUP	SDTL-36-16/4	N.S.F.	3/4"	3/4"		3"
308	1	BAR HAND SINK	EAGLE GROUP	MA2-18	N.S.F.	1/2"	1/2"	2"	
309	1	BAR SERVICE SINK	EAGLE GROUP	B5C-18	N.S.F.	3/4"	3/4"		3"
310	1	ICE CHEST	EAGLE GROUP	B30IC-18	N.S.F.				3"
501	2	TANKLESS WATER HEATER	BOSCH	TRONIC 6000C WH17	N.S.F.				

PLUMBING FIXTURE SCHEDULE

FIXTURE	MANUFACTURER	TYPE	MODEL	DESCRIPTION	MAX. FLOW RATE PER 604.4 COSA AMENDMENTS	PIPE SIZES TRAP	WASTE	VENT	C.W.	H.W.	REMARK
WC	AMER STAND	WALL MOUNTED	2859.128	FLUSH VALVE	1.28 GPF		3"	2"	3/4		EXPOSED FLUSHOMETER FOR 1 1/2" TOP SPUD BOWLS
URINAL	KOHLER	FLUSH VALVE	K-5016-T	FLUSH VALVE	1.0 GPF		3"	2"	3/4"		
LAV	AMER STAND	LUCERNE	0355.012	SYMMONS SLC-6000	0.25 GMP PER METERING CYCLE	1 1/4"	2"	2"	1/2"	1/2"	MTG. RIM 34" AFF., ASSE 1070 TMVS HOT WATER SUPPLIED TO LAVATORY AND HAND SINK FIXTURES SHALL BETWEEN 100 °F TO 109 °F.
HS	EAGLE GROUP	HAND SINK	HSA-10-F-LRS	FAUCET & DRAIN INCL.	*0.5 GPM @ 60 PSI	1 1/4"	2"	2"	1/2"	1/2"	
3-COMP. SINK	EAGLE GROUP	3-COMP. SINK	414-22-3-24	FAUCET, DRAIN, & FLOW CONTROLS	2.2 GPM @ 60 PSI	(3)3/4"	3"	2"	3/4"	3/4"	
1-COMP. SINK	EAGLE GROUP	1-COMP. SINK	414-22-1	FAUCET, DRAIN, & FLOW CONTROLS	2.2 GPM @ 60 PSI	(3)3/4"	3"	2"	3/4"	3/4"	
MOP SINK	EAGLE GROUP	MOP SINK	F1916	FAUCET W/VACUUM BREAKER & DRAIN	2.2 GPM @ 60 PSI	2"	2"	2"	1/2"	1/2"	
WS	WIN SUPPLY	WOK SINK	12" X 12" X 10"	FAUCET, DRAIN, & FLOW CONTROLS	2.2 GPM @ 60 PSI	2"	2"	2"	1/2"	1/2"	
DISH WASHER	CMA	DOOR TYPE	EST-AH			1 1/2"	3"	2"		3/4"	
PRE-WASH SINK	EAGLE GROUP	SPRAY SINK	SDTCL-60-16/4	FAUCET & DRAIN INCL.		1 1/2"	3"	2"	1/2"	1/2"	
CO	JR SMITH	CLEAN OUT	4020NBTOP4-NS								
FD	JR SMITH	FLOOR DRAIN	2030T				3"				BRONZE

FRANK D. MILETO A.I.A.
14 BEAVER BROOK DRIVE, LONG VALLEY, N.J. 07853
Tel (908) 876-9400 Fax (908) 876-9455
Email: fmileto@comcast.net

OYOSHI
5803 CENTRE AVE, SPACE 105
PITTSBURGH, PA 15206

REVISIONS

DATE: 10/11/2024
SCALE: AS DRAWING
DRAWN: D.J
JOB NO. C24-045

P-1

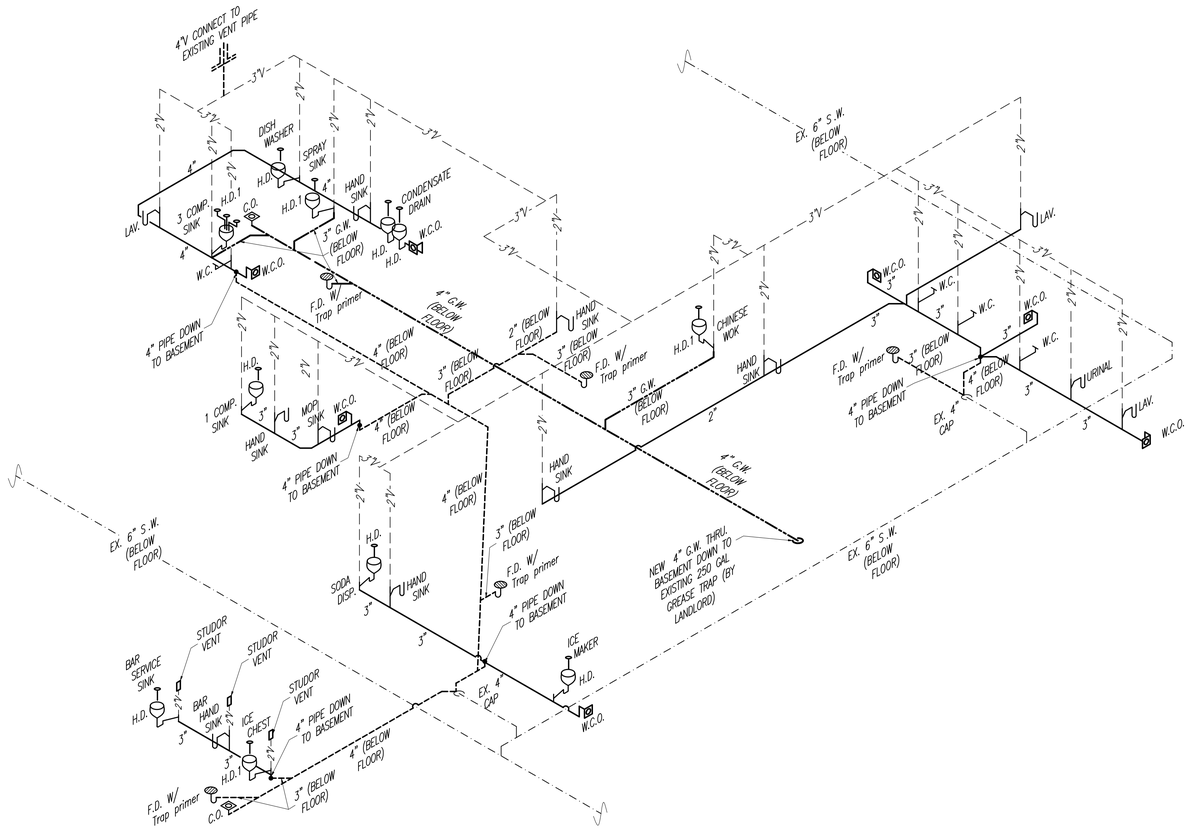

PLUMBING RISER DIAGRAM SCALE: N.T.S.

FLOOR CLEANOUT DETAIL

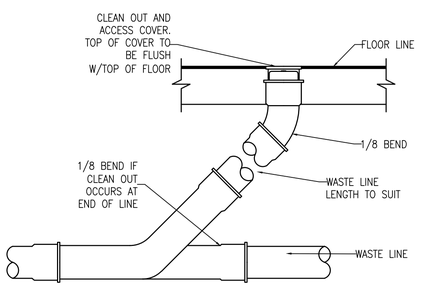

HUB DRAIN DETAIL (H.D.1)

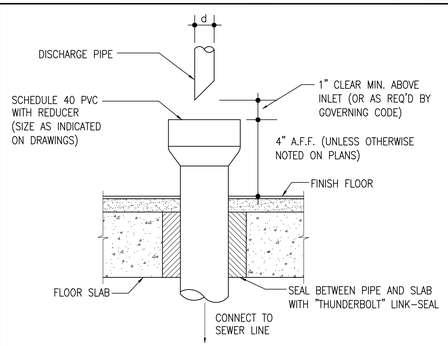

HUB DRAIN DETAIL (H.D.)

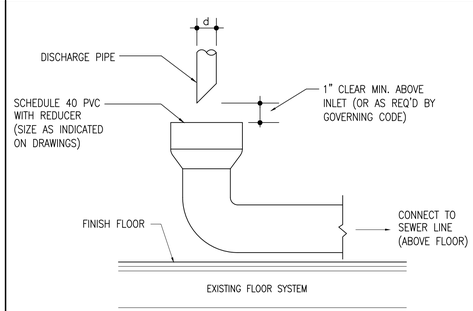

TRAP PRIMERS DETAIL

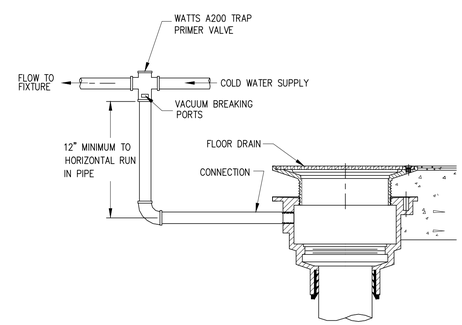

PIPING SUPPORT DETAIL

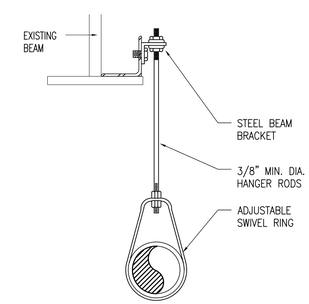

FRANK D. MILETO A.I.A.
14 BEAVER BROOK DRIVE, LONG VALLEY, N.J. 07853
Tel:(908) 876-9400 Fax:(908) 876-9455
Email: fmileto@comcast.net

OYOSHI
5803 CENTRE AVE, SPACE 105
PITTSBURGH, PA 15206

REVISIONS

DATE: 10/11/2024
SCALE: AS DRAWING
DRAWN: D.J
JOB NO. C24-045

P-2

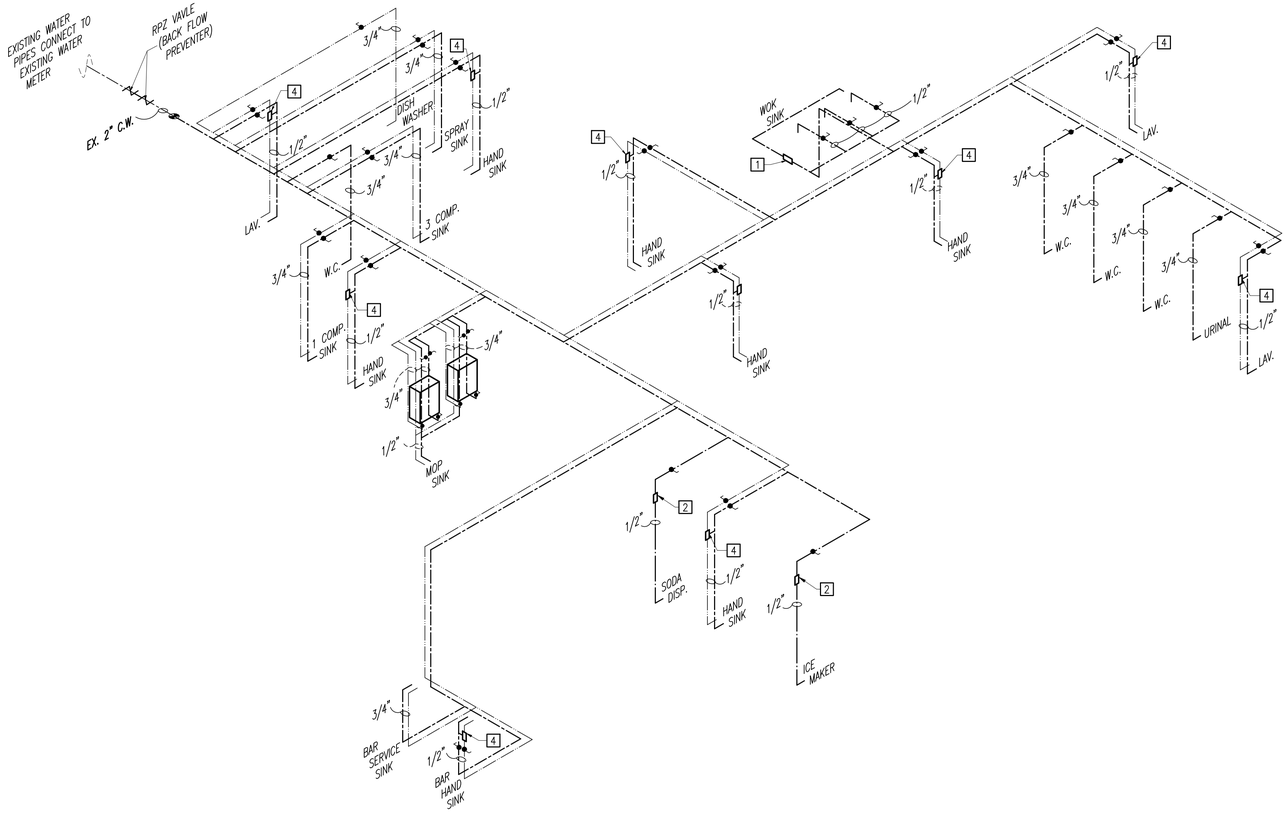

WATER RISER DIAGRAM

SCALE: N.T.S.

MIXING VALVE PIPING SCHEMATIC

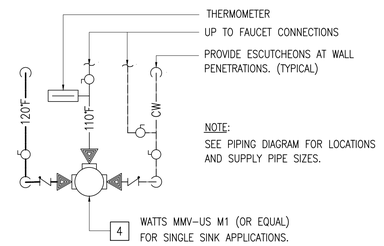

SUPPLIED WITH REMOVABLE PISTON AND THERMAL MOTOR, SEPARATE CHECK STOPS, ROUGH BRONZE FINISH. INSTALL IN SUPPLY PIPING BELOW FIXTURE. SET TEMPERATURE AT 110°F.

BACKFLOW PREVENTION SCHEDULE

DEVICE	LOCATION OR USE	DEVICE REQUIRED	STANDARD
1	FOOD AND BEVERAGE EQUIPMENT & BUFFET TABLES	BACKFLOW PREVENTER DUAL CHECK, ATMOSPHERIC VENT WATTS # 9D-M2 (OR EQUAL)	ASSE-1012
2	CARBONATED BEVERAGE MACHINE	BACK FLOW PREVENTER WATTS # SD-3 (OR EQUAL)	ASSE-1022
3	ICE MAKER	DUAL CHECK VALVE WATTS #LF7R (OR EQUAL)	ASSE-1024

TEMP. CONTROL VALVE SCHEDULE

4	HAND SINK & LAVATORY	TEMPERATURE CONTROL VALVE WATTS # MMV-M1 OR EQUAL	ASSE-1070

REGISTERED ARCHITECT
PENNSYLVANIA
FRANK D. MILETO
Frank D. Mileto

FRANK D. MILETO A.I.A.
14 BEAVER BROOK DRIVE, LONG VALLEY, N.J. 07853
Tel:(908) 876-8400 Fax:(908) 876-9455
Email: fmileto@comcast.net

OYOSHI

5803 CENTRE AVE, SPACE 105
PITTSBURGH, PA 15206

REVISIONS

DATE: 10/11/2024
SCALE: AS DRAWING
DRAWN: D.J
JOB NO. C24-045

P-3

SEDIMENT TRAP DETAIL

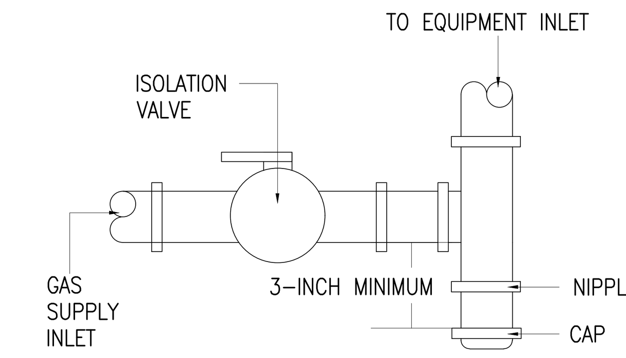

NOTE:
SEDIMENT TRAP SHALL BE INSTALLED ON THE SUPPLY GAS PIPE FOR EXISTING HVAC UNIT, MAKE UP AIR UNIT AND EACH APPLIANCE EXCEPT RANGES

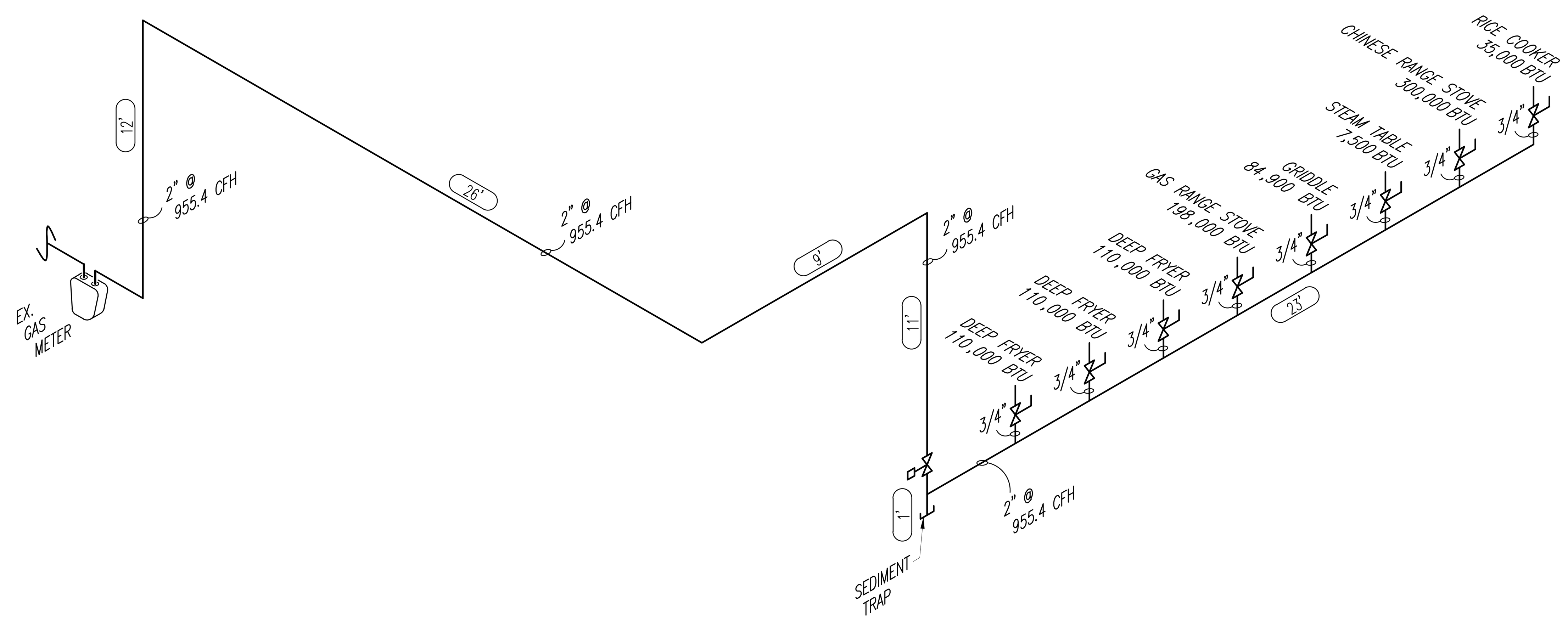

GAS RISER DIAGRAM SCALE: N.T.S.

GAS USAGE CHART			
EQUIPMENT	EACH (BTUH)	QUANTITY	TOTAL (BTUH)
DEEP FRYER	110000	3	330000
RICE COOKER	35000	1	35000
CHINESE RANGE STOVE	300000	1	300000
GAS RANGE STOVE	198000	1	198000
GRIDDLE	84900	1	84900
STEAM TABLE	7500	1	7500
TOTAL			955400

GAS PIPING CALCULATION BASED ON TABLE 402.4(2) OF IFGC-2018 EDITION MAXIMUM CAPACITY OF PIPE IN CUBIC FEET OF GAS PER HOUR FOR GAS PRESSURE LESS THAN 2 PSI AND A PRESSURE DROP OF 0.5 INCH WATER COLUMN (BASE ON A 0.60 SPECIFIC GRAVITY GAS).

TOTAL RUN FROM POINTS OF DELIVERY TO THE REMOTE OUTLET 81 FT.
TOTAL BTUH = 955,400 BTU/H

NOTE: (IFGC 2018, SECTION 410.2)

1. A TEE FITTING WITH ONE OPENING CAPPED OR PLUGGED SHALL BE INSTALLED BETWEEN THE MP REGULATOR AND ITS UPSTREAM SHUTOFF VALVE. SUCH TEE FITTING SHALL BE POSITIONED TO ALLOW CONNECTION OF A PRESSURE-MEASURING INSTRUMENT AND TO SERVE AS A SEDIMENT TRAP.
2. A TEE FITTING WITH ONE OPENING CAPPED OR PLUGGED SHALL BE INSTALLED NOT LESS THAN 10 PIPE DIAMETERS DOWNSTREAM OF THE MP REGULATOR OUTLET. SUCH TEE FITTING SHALL BE POSITIONED TO ALLOW CONNECTION OF A PRESSURE-MEASURING INSTRUMENT.

FRANK D. MILETO A.I.A.
14 BEAVER BROOK DRIVE, LONG VALLEY, N.J. 07853
Tel:(908) 876-9400 Fax:(908) 876-9455
Email: fmileto@comcast.net

OYOSHI
5803 CENTRE AVE, SPACE 105
PITTSBURGH, PA 15206

REVISIONS

DATE: 10/11/2024
SCALE: AS DRAWING
DRAWN: D.J
JOB NO. C24-045

P-4